Canon

PUB. DIE-0501-000A

CDX-36150

Codex Recorder for Canon EOS C700

Guide for the EOS C700 models

Table of Contents

Trademark Acknowledgements

- Names and products mentioned in the manual may be trademarks or registered trademarks of their respective companies.

Preparations

This section explains how to attach the CDX-36150 Recorder to the EOS C700 / EOS C700 PL / EOS C700 GS PL camera and remove it, and insert recording media (Codex Capture Drive 2.0) to the recorder and initialize recording media.
For safety and maintenance instructions and detailed information about the recorder, refer to the CDX-36150 Recorder's Getting Started Guide. PDF indicates a reference to the relevant section in the camera's Instruction Manual (PDF file).

Attaching the CDX-36150 Recorder to the Camera

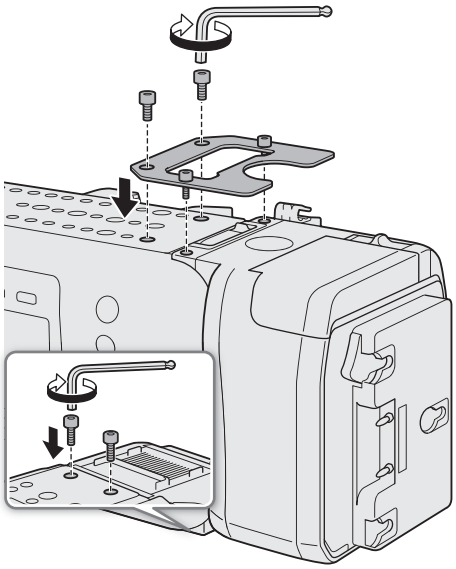

1 Press the POWER button to turn off the camera.

2 Remove the battery adapter that comes attached to the camera.

PDF *Removing an Extension Module*

3 Attach the recorder to the camera.

PDF *Installing an Extension Module*

- Follow steps 1 to 4 in the procedure to attach the recorder in the same way explained for attaching a battery adapter.
- Pull out the locking lever on the recorder to attach it to the camera.

4 Attach the reinforcement plate (supplied with the camera) to the recorder.

5 Using the hex wrenches supplied with the camera, fasten the 6 fixation screws shown in the illustration (4 on top, 2 on the bottom) to secure the recorder in place.

- Use the 1/4" (0.64 cm) wrench for the 2 top plate screws closer to the front of the camera and the M4 wrench for the rest of the screws and bolts (top/bottom plates).

Removing the CDX-36150 Recorder

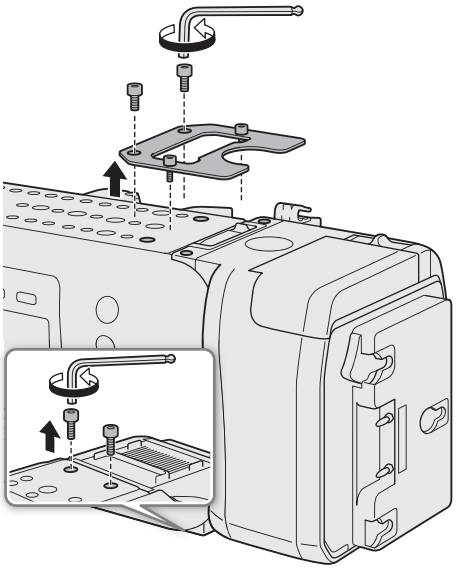

1 Press the POWER button to turn off the camera.

2 Remove all power sources connected to the recorder (DC IN and battery).

3 Use the hex wrenches supplied with the camera to remove the 6 screws shown in the illustration.

- Use the 1/4" (0.64 cm) wrench for the 2 top plate screws closer to the front of the camera and the M4 wrench for the rest of the screws and bolts (top/bottom plates).

4 Remove the reinforcement plate from the recorder.

5 Remove the recorder.

PDF *Removing an Extension Module*

- Follow the procedure to remove the recorder in the same way explained for removing the battery adapter.
- Pull out the locking lever on the recorder to remove it from the camera.

NOTES

- Be careful not to obstruct in any way the recorder's air vents.
- To use the camera's DC IN 12V terminal when the recorder is attached to the camera, remove the cover next to the CDX-36150 Recorder's DC IN terminal.

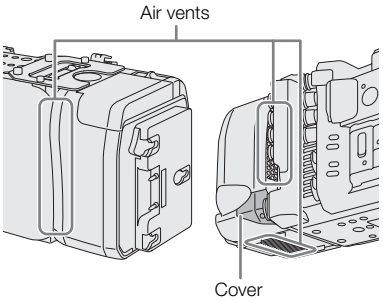

Powering the CDX-36150 Recorder

Connect the power supply to the CDX-36150 Recorder before turning on the camera. While the CDX-36150 Recorder is docked with the camera, power is supplied to the camera from the power source connected to the CDX-36150 Recorder. You can also connect a power source directly to the camera's DC IN 12V terminal.

1 Press the camera's POWER button to turn off the camera.

2 Connect the power supply (DC IN or battery) to the recorder.
- Refer to the CDX-36150 Recorder's Getting Started Guide.

3 Press the camera's POWER button to turn on the camera.
- The LED on the top of the CDX-36150 Recorder will illuminate in different colors to indicate the recorder's status. Refer to the following table.

CDX-36150 Recorder's LED status

LED	Recorder status
Blue	Record standby mode.
Red	While recording, or the power level of the power source connected to the CDX-36150 Recorder is low.
Green	During playback.
Off	The camera is turned off or the main recording format is set to an option other than [RAW (CDX Capture Drive)] or [ProRes (CDX Capture Drive)].

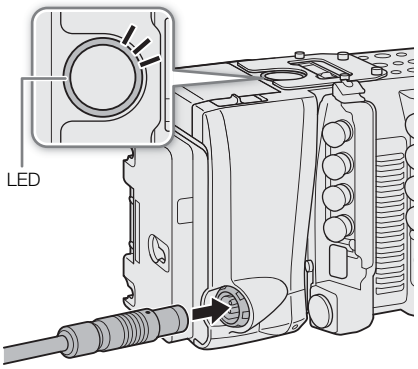

You can press the button inside the ring to change the LED's brightness between 3 levels or to turn it off completely. Even when you turn it off, the LED will illuminate in red if a low power warning is triggered.

Initializing a Capture Drive

For details about the recording media and how to insert a Capture Drive 2.0 into the recorder, refer to the CDX-36150 Recorder's Getting Started Guide. The first time you use a Capture Drive with the camera, initialize it first using the camera's menu.

1 Set the main recording format to [RAW (CDX Capture Drive)] or [ProRes (CDX Capture Drive)].

MENU/EVF ▸ [Rec/Media Setup] ( ) ❯ [Main Rec Format] ❯ [RAW (CDX Capture Drive)] or [ProRes (CDX Capture Drive)]

PDF *Selecting the Main Recording Format*

2 Initialize the Capture Drive in the recorder.

MENU/EVF ▸ [Rec/Media Setup] ( ) ❯ [Initialize Media] ❯ [CDX Capture Drive]

3 Camera menu: Press both [FORMAT] buttons simultaneously.
Monitoring menu: Select [OK] and then press SET.

PDF *Initializing Recording Media*

- The Capture Drive will be initialized for use with the recording format selected in step 1.

IMPORTANT

- Initializing a Capture Drive will permanently erase all the data it contains. Lost data cannot be recovered. Make sure you save important recordings in advance.
- Observe the following precautions while the camera is accessing the Capture Drive in the recorder. Failure to do so may result in permanent data loss.
  - Do not turn off the camera or recorder. Do not remove/disconnect the battery or other power source.
  - Do not open the recorder's Capture Drive bay.

NOTES

- You can check the capacity and remaining available recording time of the Capture Drive on the INFO ▸ [MEDIA] screen.
- A Capture Drive cannot be used to record clips in different recording formats (RAW and ProRes).
- When you initialize a Capture Drive with the main recording format set to [ProRes (CDX Capture Drive)], the recordable space will be reduced to approximately half of the Capture Drive's nominal capacity to ensure a highly reliable format thanks to the use of multi-stream processing.

Recording

After the recorder is ready and the Capture Drive has been initialized for use with the camera, you can use it to record the camera's RAW data. The selection of main recording format (including the recording media used) is explained in the camera's Instruction Manual. Recording is performed using the camera's REC button, as explained in the same chapter. PDF *Recording Video*

This section will cover only those aspects that are different from what is explained in the camera's Instruction Manual when using the CDX-36150 Recorder.

Before using the CDX-36150 Recorder to make important recordings for the first time, make test recordings using the video configuration(s) you plan to use to check that the camera and recorder are operating correctly.

Video Configuration

The following video configuration combinations are available when using the CDX-36150 Recorder to record the camera's RAW data. The audio recorded will be 4-channel linear PCM audio (24 bit, 48 kHz).
PDF *Video Configuration*

Available video configurations

Main recording format	Resolution	Codec	Frame rate
[RAW (CDX Capture Drive)]	C700 C700 PL 4512x2376 C700 GS PL 4272x2376 C700 C700 PL 4512x1920 4096x2160	–	59.94P 50.00P 29.97P 25.00P 24.00P 23.98P
[ProRes (CDX Capture Drive)]	4096x2160 3840x2160	ProRes 422 HQ, 10 bit	
	2048x1080 1920x1080	ProRes 4444 XQ, 12 bit ProRes 4444, 12 bit ProRes 422 HQ, 10 bit	

Shooting frame rates during slow & fast motion

Available shooting frame rates vary depending on the [Frame Rate] setting selected in the video configuration. The range of available shooting frame rates depends also on the resolution and codec used, as shown at the top of the following tables (● = the shooting frame rates listed under the column are available).

Available shooting frame rates (RAW)

Resolution	Available range		
C700 C700 PL 4512x2376 C700 GS PL 4272x2376	●	–	–
C700 C700 PL 4512x1920 4096x2160	●	●	–
2048×1080 (cropped)*	●	●	●
[Frame Rate] setting	Shooting frame rates		
59.94P	1.00, 2.00, 3.00, 5.99, 14.99, 29.97, 59.94, 89.91	119.88	149.85, 179.82, 209.79, 239.76
29.97P	1.00, 2.00, 3.00, 5.99, 14.99, 29.97, 31.97, 35.96, 39.96, 43.96, 47.95, 51.95, 55.94, 59.94, 89.91	119.88	149.85, 179.82, 209.79, 239.76
23.98P	1.00, 2.00, 3.00, 5.99, 11.99, 23.98, 25.97, 27.97, 29.97, 31.97, 35.96, 39.96, 43.96, 47.95, 51.95, 55.94, 59.94, 71.93, 95.90	119.88	143.86, 167.83, 191.81, 215.78, 239.76
24.00P	1.00, 2.00, 3.00, 6.00, 12.00, 24.00, 26.00, 28.00, 30.00, 32.00, 36.00, 40.00, 44.00, 48.00, 52.00, 56.00, 60.00, 72.00, 96.00	120.00	144.00, 168.00, 192.00, 216.00, 240.00
50.00P	1.00, 5.00, 15.00, 25.00, 50.00, 54.00, 58.00, 75.00, 100.00	–	125.00, 150.00, 175.00, 200.00
25.00P	1.00, 5.00, 15.00, 25.00, 26.00, 28.00, 30.00, 34.00, 38.00, 42.00, 46.00, 50.00, 54.00, 58.00, 75.00, 100.00	–	125.00, 150.00, 175.00, 200.00

* Only when HOME ▸ [S&F FPS] ❯ [ACTIVATE] is set to [On (crop)].

Available shooting frame rates (ProRes)

Resolution	Codec**	Available range		
4096x2160 3840x2160	ProRes 422 HQ	●	–	–
2048x1080 1920x1080	ProRes 4444 XQ ProRes 4444	●	–	–
2048x1080 1920x1080	ProRes 422 HQ	●	●	–
2048x1080 (cropped)* 1920x1080 (cropped)*	ProRes 422 HQ	●	●	●
[Frame Rate] setting		Shooting frame rates		
59.94P		1.00, 2.00, 3.00, 5.99, 14.99, 29.97, 59.94	89.91, 119.88	149.85, 179.82, 209.79, 239.76
29.97P		1.00, 2.00, 3.00, 5.99, 14.99, 29.97, 31.97, 35.96, 39.96, 43.96, 47.95, 51.95, 55.94, 59.94	89.91, 119.88	149.85, 179.82, 209.79, 239.76
23.98P		1.00, 2.00, 3.00, 5.99, 11.99, 23.98, 25.97, 27.97, 29.97, 31.97, 35.96, 39.96, 43.96, 47.95, 51.95, 55.94, 59.94	71.93, 95.90, 119.88	143.86, 167.83, 191.81, 215.78, 239.76
24.00P		1.00, 2.00, 3.00, 6.00, 12.00, 24.00, 26.00, 28.00, 30.00, 32.00, 36.00, 40.00, 44.00, 48.00, 52.00, 56.00, 60.00	72.00, 96.00, 120.00	144.00, 168.00, 192.00, 216.00, 240.00
50.00P		1.00, 5.00, 15.00, 25.00, 50.00	54.00, 58.00, 75.00, 100.00	125.00, 150.00, 175.00, 200.00
25.00P		1.00, 5.00, 15.00, 25.00, 26.00, 28.00, 30.00, 34.00, 38.00, 42.00, 46.00, 50.00	54.00, 58.00, 75.00, 100.00	125.00, 150.00, 175.00, 200.00

* Only when **HOME** ▸ [S&F FPS] ❯ [ACTIVATE] is set to [On (crop)].
** Selected with the **MENU** ▸ [Rec/Media Setup] ❯ [Bit Rate] setting.

Main Recording Video Configuration and Video Output Configuration from the SDI OUT Terminals

Main recording video configuration			Output from each terminal[3, 4]				Number of terminals required	Output signal
[Main Rec Format][1]	Resolution/ Color sampling	Frame rate[2]	SDI OUT 1	SDI OUT 2	SDI OUT 3	SDI OUT 4		
[RAW (CDX Capture Drive)]	C700 C700 PL 4512x2376[5] C700 GS PL 4272x2376[5] C700 C700 PL 4512x1920[5] 4096x2160 RAW	60P to 120P (120P inclusive)	Frame-sequential				4	3G
			RGBA1	RGBA2	RGBA3	RGBA4		
		30P to 60P (60P inclusive)	Frame-sequential				2	
			RGBA1	RGBA2				
		30P or lower	RGBA				1	
	2048x1080 (cropped) RAW	120P to 240P (240P inclusive)	Frame-sequential				4	3G
			RGBA1/ RGBA5	RGBA2/ RGBA6	RGBA3/ RGBA7	RGBA4/ RGBA8		
		60P to 120P (120P inclusive)	Frame-sequential				2	
			RGBA1/ RGBA3	RGBA2/ RGBA4				
		60P or lower	RGBA1/ RGBA2				1	
[ProRes (CDX Capture Drive)]	4096x2160 3840x2160 YCbCr 4:2:2, 10 bit	30P to 60P (60P inclusive)	Square division (Quad HD)				4	3G
			Upper left	Upper right	Lower left	Lower right		
		30P or lower	Square division (Quad HD)				4	HD
			Upper left	Upper right	Lower left	Lower right		
	2048x1080 1920x1080 RGB 4:4:4, 12 bit	30P to 60P (60P inclusive)	RGB				2	Dual link 3G
		30P or lower	RGB				1	3G
	2048x1080 1920x1080 YCbCr 4:2:2, 10 bit	120P to 240P (240P inclusive)	Frame-sequential				4	3G
			YCC1	YCC2	YCC3	YCC4		
		60P to 120P (120P inclusive)	Frame-sequential				2	
			YCC1	YCC2				
		30P to 60P (60P inclusive)	YCC				1	
		30P or lower, 59.94i[6], 50.00i[6]	YCC				1	HD

[1] MENU ▸ [Rec/Media Setup] ➤ [Main Rec Format] setting.
[2] The frame rate of the video output will be the same as that used for recording (except when slow & fast motion recording is activated).
[3] The color sampling will be determined by the option selected for the MENU ▸ [Rec/Media Setup] ➤ [Resolution/Sampling] setting.
[4] When only one or two SDI connections are required, the other SDI OUT terminals output the same signal as SDI OUT 1 (or SDI OUT 1 and SDI OUT 2). This is indicated by the gray cells in the table.
[5] Video will be output at a resolution of 4096x2160.
[6] Only when the resolution is 1920x1080.

Main Recording Video Configuration and Video Output Configuration from the MON. Terminals and HDMI OUT Terminal

<table>
<tr><th colspan="3">Main recording video configuration</th><th colspan="4">Video output configuration</th></tr>
<tr><th rowspan="3">[Main Rec Format][1]</th><th rowspan="3">Frame rate[2]</th><th rowspan="3">Resolution</th><th colspan="2">MON. terminals[3]</th><th colspan="2">HDMI OUT terminal[3, 5]</th></tr>
<tr><th colspan="2">[MON. Output][4]</th><th colspan="2">[HDMI Max Res.][6]</th></tr>
<tr><th>[2048x1080/ 1920x1080]</th><th>[1920x1080]</th><th>[4096x2160/ 3840x2160]</th><th>[1920x1080]</th></tr>
<tr><td rowspan="2">[RAW (CDX Capture Drive)]</td><td rowspan="7">59.94P
50.00P
29.97P
25.00P
24.00P
23.98P</td><td>4512x2376
4512x1920
4096x2160
2048x1080 (cropped)</td><td>2048x1080
YCbCr 4:2:2, 10 bit</td><td rowspan="7">1920x1080
YCbCr 4:2:2, 10 bit</td><td colspan="2" rowspan="2">1920x1080,
720x480 (59.94P),
720x576 (50.00P)</td></tr>
<tr><td>4272x2376</td><td>1920x1080
YCbCr 4:2:2, 10 bit</td></tr>
<tr><td rowspan="5">[ProRes (CDX Capture Drive)]</td><td>4096x2160</td><td>2048x1080
YCbCr 4:2:2, 10 bit</td><td>4096x2160</td><td rowspan="5">1920x1080,
720x480
(59.94P),
720x576
(50.00P)</td></tr>
<tr><td>3840x2160</td><td>1920x1080
YCbCr 4:2:2, 10 bit</td><td>3840x2160</td></tr>
<tr><td>2048x1080</td><td>2048x1080
YCbCr 4:2:2, 10 bit</td><td rowspan="2">1920x1080,
720x480 (59.94P),
720x576 (50.00P)</td></tr>
<tr><td>1920x1080</td><td>1920x1080
YCbCr 4:2:2, 10 bit</td></tr>
</table>

[1] **MENU** ▸ [Rec/Media Setup] ➤ [Main Rec Format] setting.
[2] The frame rate of the video output will be the same as that used for recording (except when slow & fast motion recording is activated).
[3] Onscreen displays and assistance functions like peaking and zebra pattern can be output to an external monitor.
[4] **MENU** ▸ [System Setup] ➤ [Term. Output Setup] ➤ [MON. Output] setting.
[5] When **MENU** ▸ [System Setup] ➤ [Term. Output Setup] ➤ [MON. Output] is set to [Off], the HDMI OUT output will change depending on the capabilities of the monitor used. When [MON. Output] is set to a setting other than [Off], if the monitor connected to the terminal does not support the video output configuration, video output from the HDMI OUT terminal will be turned off.
The color sampling will be set automatically to YCbCr 4:2:2, 10 bit, YCbCr 4:4:4, 8 bit or RGB 4:4:4, 8 bit, depending on the capabilities of the external monitor.
[6] **MENU** ▸ [System Setup] ➤ [Term. Output Setup] ➤ [HDMI Max Res.] setting.

1 Set the main recording format to [RAW (CDX Capture Drive)] or [ProRes (CDX Capture Drive)].

MENU/EVF ▸ [Rec/Media Setup] ( ) ❯ [Main Rec Format] ❯ [RAW (CDX Capture Drive)] or [ProRes (CDX Capture Drive)]

PDF *Selecting the Main Recording Format*

2 If necessary, select the desired system frequency.

PDF *Selecting the System Frequency*

3 Select the desired frame rate. To use slow & fast motion recording, activate it and select also the desired shooting frame rate.

PDF *Selecting the Frame Rate*, PDF *Slow & Fast Motion Recording*

NOTES

- When the main recording format is set to [RAW (CDX Capture Drive)], a special gamma curve, optimized for RAW video, will be used.

Onscreen Displays

See also PDF *Onscreen Displays on the HOME Screen*, PDF *Onscreen Displays on the Shooting Screen*.

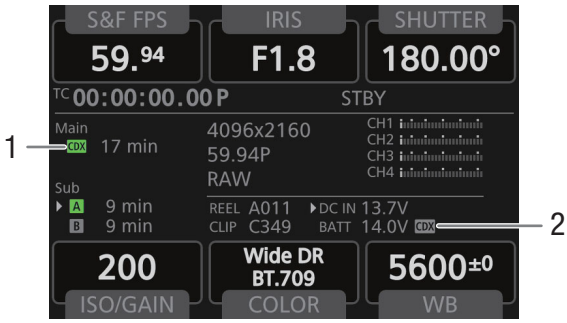

1 Capture Drive status: In green – can record; In white – reading the Capture Drive.
CDX (in red): No Capture Drive inserted or cannot record on the Capture Drive.
Appears also at the bottom left corner of the monitoring screen.

2 Power supply connected to the recorder (voltage). Refer to the CDX-36150 Recorder's Getting Started Guide.
Appears also at the top right of the monitoring screen.

Sub Recording on a CFast or SD Card

While using the CDX-36150 Recorder to record RAW data as the main recording, you can simultaneously have the camera record a sub recording in XF-AVC format on a CFast card (XF-AVC Intra) or SD card (XF-AVC Proxy).

PDF *Simultaneous Sub Recordings*

NOTES

- When the main recording format is set to [RAW (CDX Capture Drive)] or [ProRes (CDX Capture Drive)] and the CDX-36150 Recorder is not docked with the camera, clips will not be recorded on the CFast card or SD card even if simultaneous sub recording was activated. For this reason, even when the time code running mode is set to [Regen.], the last time code recorded on the CFast or SD card will not be read.
- When the resolution of the main recording format is 4512x2376 or 4272x2376, you can display an onscreen marker that indicates the portion of the image being recorded as the sub recording.
PDF *Displaying Onscreen Markers*

Playing Back Recordings from the Capture Drive

Press the camera's PLAY button to set the camera in playback mode. If you were recording on the CDX-36150 Recorder, information about the last clip recorded on the Capture Drive will be displayed on the control display. During the playback of RAW clips, the [Canon Log 2] gamma, [Cinema Gamut] color space and [Neutral] color matrix will be used.

PDF *Playback*

To switch to playback from the Capture Drive after playing back recordings from other recording media:

1 From the PLAY screen, select the Capture Drive as the recording media to play back.

PLAY ▸ [PB MEDIA] ❯ [CDX Capture Drive (RAW)] or [CDX Capture Drive (ProRes)]

PDF *Selecting the Recording Media and Format to Play Back*

Playback Video Configuration and Video Output Configuration by Terminal

Video configuration of the clip		Video output configuration				
[Playback Media]/ Resolution	Frame rate	SDI OUT terminals[1]	MON. terminals [MON. Output][2]		HDMI OUT terminal[3] [HDMI Max Res.][4]	
			[2048x1080/ 1920x1080]	[1920x1080]	[4096x2160/ 3840x2160]	[1920x1080]
[CDX Capture Drive (RAW)] C700 C700 PL 4512x2376 C700 C700 PL 4512x1920 4096x2160 2048x1080 (cropped)	59.94P 50.00P 29.97P 25.00P 24.00P 23.98P	2048x1080 YCbCr 4:2:2, 10 bit	2048x1080 YCbCr 4:2:2, 10 bit	1920x1080 YCbCr 4:2:2, 10 bit	–	1920x1080, 720x480 (59.94P), 720x576 (50.00P)
C700 GS PL 4272x2376			1920x1080 YCbCr 4:2:2, 10 bit			
[CDX Capture Drive (ProRes)] 4096x2160		4096x2160 YCbCr 4:2:2, 10 bit	2048x1080 YCbCr 4:2:2, 10 bit		4096x2160[5]	
3840x2160		3840x2160 YCbCr 4:2:2, 10 bit	1920x1080 YCbCr 4:2:2, 10 bit		3840x2160[5]	
2048x1080		2048x1080 / RGB 4:4:4, 12 bit YCbCr 4:2:2, 10 bit	2048x1080 YCbCr 4:2:2, 10 bit		1920x1080, 720x480 (59.94P), 720x576 (50.00P)	
1920x1080		1920x1080 / RGB 4:4:4, 12 bit YCbCr 4:2:2, 10 bit	1920x1080 YCbCr 4:2:2, 10 bit			

[1] During the playback of sub recording (XF-AVC Proxy) clips, if the output of onscreen displays is activated for the MON. terminals, the onscreen displays will be output also from the SDI OUT terminals.
[2] MENU ▸ [System Setup] ❯ [Term. Output Setup] ❯ [MON. Output] setting.
[3] When MENU ▸ [System Setup] ❯ [Term. Output Setup] ❯ [MON. Output] is set to [Off], the HDMI OUT output will change depending on the capabilities of the monitor used. When [MON. Output] is set to a setting other than [Off], if the monitor connected to the terminal does not support the video output configuration, video output from the HDMI OUT terminal will be turned off.
The color sampling will be set automatically to YCbCr 4:2:2, 10 bit, YCbCr 4:4:4, 8 bit or RGB 4:4:4, 8 bit, depending on the capabilities of the external monitor.
[4] MENU ▸ [System Setup] ❯ [Term. Output Setup] ❯ [HDMI Max Res.] setting.
[5] Only available when MENU ▸ [System Setup] ❯ [Term. Output Setup] ❯ [SDI OUT Output] is set to [Off].

NOTES

- During the playback of RAW clips, if the camera's onscreen displays are being output from the MON. terminals, the onscreen displays will be superimposed also on video output from the SDI OUT terminals.

- During the playback of RAW clips, the following onscreen displays will not appear on the monitoring screen.
  - Shutter speed
  - Aperture value
  - ISO speed/gain
  - Recording date/time
  - Shooting frame rate
  - Custom picture
  - Relay recording icon
  - OK mark/ ✓ mark

The following operations are available during playback from the Capture Drive in the CDX-36150 Recorder. For details, refer to the camera's Instruction Manual.

PDF *Clip/Photo Operations*

Clip operations menu

Menu item	[Playback Media]*	
	[CDX Capture Drive (RAW)]	[CDX Capture Drive (ProRes)]
[Display Clip Info]	●	●
[Add OK Mark], [Delete OK Mark]	-	-
[Add ✓ Mark], [Delete ✓ Mark]	-	-
[Delete]	●	●
[Delete User Memo]	-	-
[Copy CP File]	-	-
[Recover Clip]	-	●
[FTP Transfer]	-	-

* **PLAY▸** [PB MEDIA] setting.

Troubleshooting

The messages that may appear when using the CDX-36150 Recorder/Capture Drive are, for the most part, the same as the messages that appear when using a CFast card. In the case of the CDX-36150 Recorder/Capture Drive, the CDX icon will appear above the message.

PDF *List of Messages*

Messages for the CDX-36150 Recorder

Capture Drive bay open.

- The recorder's Capture Drive bay is open. Insert a Capture Drive and close the Capture Drive bay.

Media is not supported

- The Capture Drive inserted in the recorder is not compatible for use with the camera. Check the Capture Drive.

Abridged Specifications

This section presents only technical specifications that differ from those given in the camera's Instruction Manual. For a complete list of the camera's specifications, refer to PDF *Specifications*.

System

- Recording System
  Video: Cinema RAW, Apple ProRes
  Audio compression: Linear PCM, 24 bit, 48 kHz, 4 channels
- Recording/Playback Signal
  Cinema RAW:
  Resolution: C700 C700 PL 4512x2376, C700 GS PL 4272x2376, C700 C700 PL 4152x1920, 4096x2160, 2048x1080 (cropped)
  Maximum frame rate: 240P
  Apple ProRes:
  Resolution: 4096x2160, 3840x2160, 2048x1080, 1920×1080, 2048x1080 (cropped), 1920x1080 (cropped)
  Codec: Apple ProRes 4444 XQ, ProRes 4444, ProRes 422 HQ
  Maximum frame rate: 240P
- Recording Media (not included)
  Codex Capture Drive 2.0
- Approximate Recording Time (using a 2 TB Capture Drive 2.0, for reference only)

Main recording video configuration			Approximate recording time
Main recording format	Resolution	Frame rate*	
[RAW (CDX Capture Drive)]	4512x2376	59.94P	32 min.
		24.00P	81 min.
		50.00P	39 min.
	4272x2376	59.94P	34 min.
		24.00P	86 min.
		50.00P	41 min.
	4512x1920	59.94P	40 min.
		24.00P	100 min.
		50.00P	48 min.
	4096x2160	59.94P	39 min.
		24.00P	98 min.
		50.00P	47 min.

* When the frame rate is set to 29.97P or 25.00P, the approximate recording time will be about twice that for 59.97P or 50.00P, respectively. When the frame rate is set to 23.98P, the approximate recording time will be at a par with that for 24.00P.

Main recording video configuration			Approximate recording time
Main recording format	Resolution/Codec	Frame rate*	
[ProRes (CDX Capture Drive)]	4096x2160 ProRes 422 HQ, 10 bit	59.94P	67 min.
		24.00P	169 min.
		50.00P	81 min.
	3840x2160 ProRes 422 HQ, 10 bit	59.94P	72 min.
		24.00P	180 min.
		50.00P	86 min.
	2048x1080 ProRes 4444 XQ, 12 bit	59.94P	113 min.
		24.00P	282 min.
		50.00P	135 min.
	2048x1080 ProRes 422 HQ, 10 bit	59.94P	254 min.
		24.00P	636 min.
		50.00P	305 min.
	1920x1080 ProRes 4444 XQ, 12 bit	59.94P	129 min.
		24.00P	322 min.
		50.00P	154 min.
	1920x1080 ProRes 422 HQ, 10 bit	59.94P	290 min.
		24.00P	726 min.
		50.00P	348 min.

* When the frame rate is set to 29.97P or 25.00P, the approximate recording time will be about twice that for 59.97P or 50.00P, respectively. When the frame rate is set to 23.98P, the approximate recording time will be at a par with that for 24.00P.

Weight and dimensions are approximate. Errors and omissions excepted.
The information in this guide is verified as of March 2017. Subject to change without notice.

Canon Inc. 30-2, Shimomaruko 3-chome, Ohta-ku, Tokyo 146-8501, Japan
CANON Europa N.V. Bovenkerkerweg 59, 1185 XB Amstelveen, The Netherlands http://www.canon–europe.com

USA http://pro.usa.canon.com
CANON U.S.A., INC.
http://pro.usa.canon.com/support
(855) CINE-EOS (855-246-3367)
(USA only)

UNITED KINGDOM
Canon UK Ltd
Unit 160, Centennial Park, Centennial Avenue,
Elstree, Hertfordshire, WD6 3SG
0844-369-0100

Visit your local Canon Web site to download the latest version of this guide.

PUB. DIE-0501-000A