PHANTOM 4 PRO/PRO+ SERIES

User Manual V1.8

2020.01

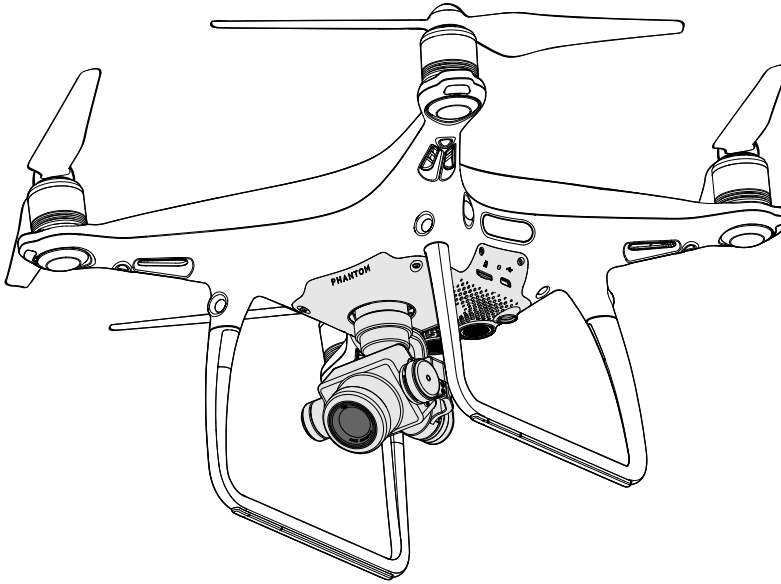

Searching for Keywords

Search for keywords such as “battery” and “install” to find a topic. If you are using Adobe Acrobat Reader to read this document, press Ctrl+F on Windows or Command+F on Mac to begin a search.

Navigating to a Topic

View a complete list of topics in the table of contents. Click on a topic to navigate to that section.

Printing this Document

This document supports high resolution printing.

Using this manual

Legends

Warning Important Hints and Tips Reference

Read Before the First Flight

Read the following documents before using the PHANTOM™ 4 Pro / Pro+:

1. In the Box
2. User Manual
3. Quick Start Guide
4. Disclaimer and Safety Guidelines
5. Intelligent Flight Battery Safety Guidelines

We recommend that you watch all tutorial videos on the official DJI™ website and read the Disclaimer before you fly. Prepare for your first flight by reviewing the Quick Start Guide and refer to the User Manual for more details.

Watch the Tutorial Videos

Please watch the tutorial videos at the link below, which demonstrates how to use Phantom 4 Pro / Pro+ safely:

https://www.dji.com/phantom-4-pro-v2/video

Download the DJI GO 4 App

Be sure to use the DJI GO™ 4 app or other apps compatible with DJI aircraft during flight.
Scan the QR code on the right to download the latest version.
The Android version of the DJI GO 4 app is compatible with Android 4.4 or later.
The iOS version of the DJI GO 4 app is compatible with iOS 9.0 or later.

* For increased safety, the flight is restricted to a height of 30 m and distance of 50 m when not connected or logged into the app during flight, including DJI GO 4 and all apps compatible with DJI aircraft.

Download the DJI Assistant 2

https://www.dji.com/phantom-4-pro-v2/downloads

The operating temperature of this product is 0° to 40° C. It does not meet the standard operating temperature for military grade application (-55° to 125° C), which is required to endure greater environmental variability. Operate the product appropriately and only for applications that it meets the operating temperature range requirements of that grade.

 © 2020 DJI All Rights Reserved.

Contents

Using this manual 2
- Legends 2
- Read Before the First Flight 2
- Watch the Tutorial Videos 2
- Download the DJI GO 4 App 2
- Download the DJI Assistant 2 2

Product Profile 6
- Introduction 6
- Features Highlights 6
- Installing the Aircraft 6
- Aircraft Diagram 8
- Remote Controller Diagram 8

Aircraft 13
- Flight Controller 13
- Flight Mode 13
- Flight Status Indicator 14
- Return-to-Home (RTH) 15
- Intelligent Flight Mode 19
- Vision System and Infrared Sensing System 27
- Flight Recorder 30
- Attaching and Detaching the Propellers 30
- DJI Intelligent Flight Battery 31

Remote Controller 36
- Remote Controller Profile 36
- Using the Remote Controller 36
- Remote Controller Status LED 41
- Linking the Remote Controller 42

Camera and Gimbal 45
- Camera 45
- Gimbal 47

DJI GO 4 App 49
- Equipment 49
- Editor 52
- SkyPixel 52
- Me 52

© 2020 DJI All Rights Reserved.

Flight 54
Flight Environment Requirements 54
Flight Limits and GEO Zones 54
Preflight Checklist 56
Calibrating the Compass 56
Auto Takeoff and Auto Landing 57
Starting/Stopping the Motors 58
Stop the Motor Mid-flight 59
Flight Test 59
Appendix 61
Specifications 61
Upgrading the Firmware 64
Intelligent Flight Mode 65
After-Sales Information 66

 © 2020 DJI All Rights Reserved.

Product Profile

This section introduces the Phantom 4 Pro / Pro+ and lists the components of the aircraft and remote controller.

© 2020 DJI All Rights Reserved.

Product Profile

Introduction

The DJI Phantom 4 Pro / Pro+ is an extremely smart flying camera with five-directions of obstacle sensing made up of vision and infrared sensors, making it able to intelligently avoid obstacles during flight. Its brand new camera offers unprecedentedly image quality for the Phantom, with greater clarity, lower noise, higher resolution photos and videos. Dual frequency support in the remote controller makes the HD video downlink more efficient and more stable.

The Phantom 4 Pro/Pro+ V2.0 also features a more efficient its propulsion system, as well as a 4dB (60%) operational noise reduction, as compared to the Phantom 4 Pro/Pro+. The illustrations in this user manual use Phantom 4 Pro / Pro+ as an example.

Features Highlights

Upgraded TapFly™ and ActiveTrack™ commands in the DJI GO 4 app, the Phantom 4 Pro / Pro+ flies anywhere visible on-screen with a tap and tracks moving subjects effortlessly.

Camera and Gimbal: The Phantom 4 Pro / Pro+, shoots at 4K at up to 60 frames per second and captures 20 megapixel photos that look crisper and cleaner than ever thanks to the new 1-inch CMOS sensor. Its mechanical shutter and auto focus create an even better aerial shooting experience.

Flight Controller: The flight controller has been updated to provide a safer, more reliable flight experience. A new flight recorder stores critical data from each flight. A system of visual sensors enhance hovering precision when flying indoors or in environments where GPS is unavailable. Dual IMUs and compasses design provides redundancy.

HD Video Downlink: The low-latency long range HD video downlink is powered by an enhanced version of DJI LIGHTBRIDGE™ for the Phantom 4 Pro/Pro+, and DJI's latest long-range transmission technology OCUSYNC™ for the Phantom 4 Pro/Pro+ V2.0. Support of both 2.4 GHz and 5.8 GHz wireless bands ensures a more reliable and stable connection in environments with more interference.

Remote Controller: The Phantom 4 Pro+ remote controller includes a 5.5 inch high luminance monitor with integrated DJI GO 4 for full control.

Intelligent Flight Battery: The new 5870 mAh DJI Intelligent Flight Battery features upgraded battery cells and an advanced power management system to provide up to 30 minutes* of flight.

Installing the Aircraft

Preparing the Aircraft

1. Remove the gimbal clamp from the camera as shown below:

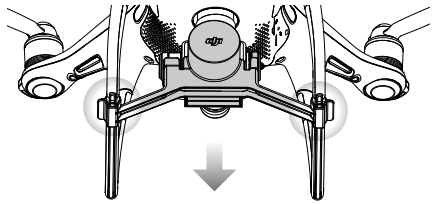

*At sea level in calm environments when flying in ATTI mode, The flight time will vary due to different flight patterns, weather conditions and altitudes.

 © 2020 DJI All Rights Reserved.

2. Attaching the Propellers

Mount the propellers with black propeller rings to the motors with black dots. Mount the propellers with sliver propeller rings to the motors without black dots. Press the propeller down onto the mounting plate and rotate in the lock direction until it is secured.

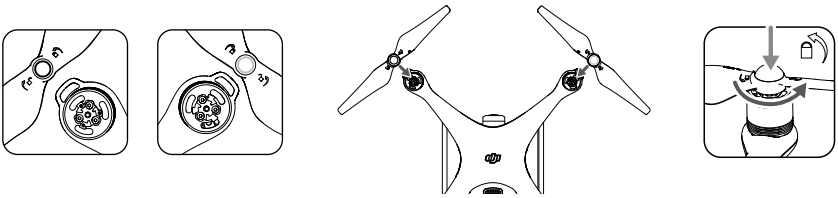

3. Battery Installation

Slide battery into the battery compartment according to the arrow's direction as shown below.

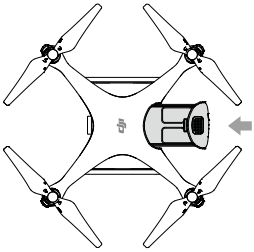

⚠ Make sure that you hear a click sound indicates the battery is firmly installed. Failure to do so may affect the flight safety of your aircraft.

Preparing the Remote Controller

Tilt the mobile device holder or the display device on the remote controller to the desired position, then adjust the antennas so they are facing outward.

If using the Phantom 4 Pro, follow the steps below to secure tablet or mobile device to the mobile device holder.

1. Press the button on the top right side of the mobile device holder to release the clamp, then adjust the clamp to fit the size of your mobile device.
2. Secure your mobile device in the clamp by pressing down, and connect your mobile device to the remote controller using a USB cable.
3. Plug one end of the cable into the mobile device, and the other end into the USB port on the back of the remote controller.

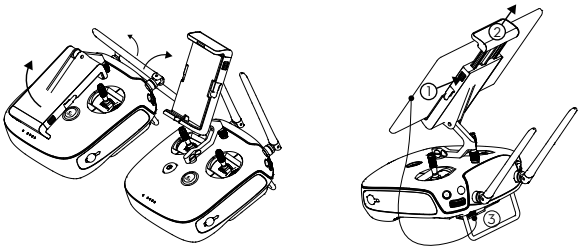

© 2020 DJI All Rights Reserved.

Aircraft Diagram

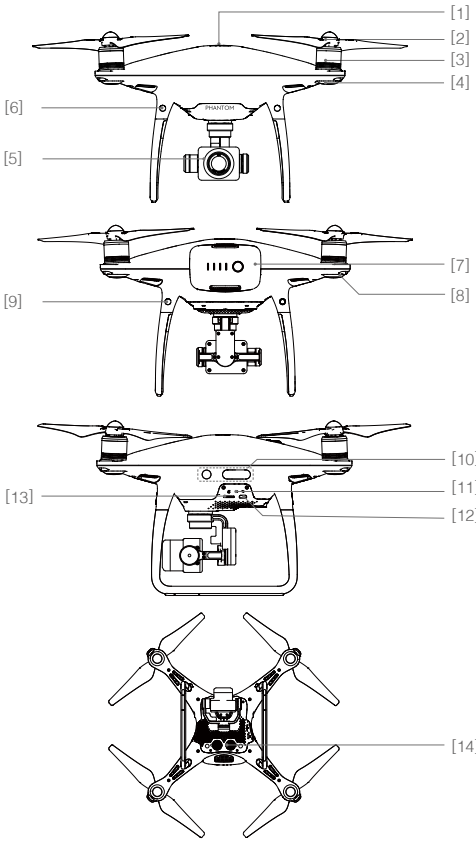

[1] GPS

[2] Propellers

[3] Motors

[4] Front LEDs

[5] Gimbal and Camera

[6] Forward Vision System

[7] Intelligent Flight Battery

[8] Aircraft Status Indicator

[9] Rear Vision System

[10] Infrared Sensing System

[11] Camera / Linking Status Indicator and Link Button

[12] Micro USB Port

[13] Camera Micro SD Card Slot

[14] Downward Vision System

Remote Controller Diagram

Phantom 4 Pro+ (Model: GL300E) / Phantom 4 Pro+ V2.0 (Model: GL300K)

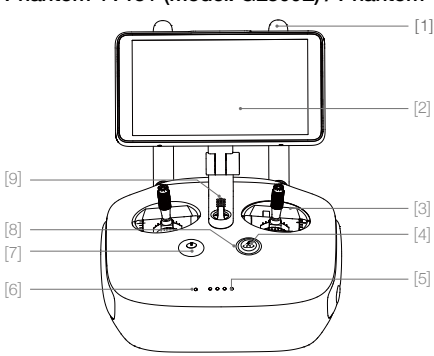

[1] Antennas
Relays aircraft control and video signal.

[2] Display Screen
Display device with Android system to run DJI GO 4 app.

[3] Control Stick
Controls the orientation and movement of the aircraft.

[4] Return Home (RTH) Button
Press and hold the button to initiate Return to Home (RTH).

 © 2020 DJI All Rights Reserved.

[5] Battery Level LEDs
Displays the battery level of the Remote Controller.

[6] Status LED
Displays the Remote Controller's system status.

[7] Power Button
Used to turn the Remote Controller on and off.

[8] RTH LED
Circular LED around the RTH button displays RTH status.

[9] Speaker
Audio output.

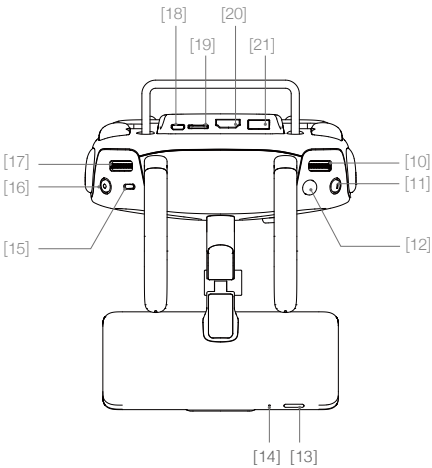

[10] Camera Settings Dial
Turn the dial to adjust camera settings.

[11] Intelligent Flight Pause Button
Press once to allow the aircraft to exit from TapFly, ActiveTrack and other intelligent flight modes.

[12] Shutter Button
Two-stage button, press to take a photo.

[13] Sleep/Wake Button
Press to sleep/wake the screen, press and hold to restart.

[14] Microphone

[15] Flight Mode Switch
Switch between P-mode, S-mode, and A-mode.

[16] Video Recording Button
Press to start recording video. Press again to stop recording.

[17] Gimbal Dial
Use this dial to control the tilt of the gimbal.

[18] Micro USB Port
Upgrading the aircraft by connecting to the remote controller using the USB OTG cable.

[19] Micro SD Card Slot
Provide extra storage space for the display device, maximum supporting 128 GB.

[20] HDMI Port
Output HDMI video signal.

[21] USB Port
USB device support.

[22] C1 Button
Customizable through the DJI GO 4 app.

[23] C2 Button
Customizable through the DJI GO 4 app.

[24] Power Port
Connect to the Charger to charge the battery of the Remote Controller.

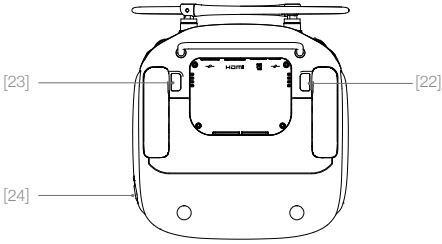

© 2020 DJI All Rights Reserved.

Phantom 4 Pro (Model: GL300F) / Phantom 4 Pro V2.0 (Model: GL300L)

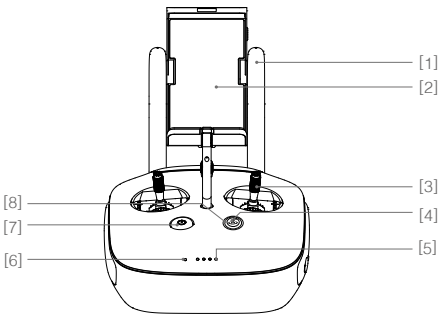

[1] Antennas

Relays aircraft control and video signal.

[2] Mobile Device Holder

Securely mounts your mobile device to the remote controller.

[3] Control Stick

Controls the orientation and movement of the aircraft.

[4] Return Home (RTH) Button

Press and hold the button to initiate Return to Home (RTH).

[5] Battery Level LEDs

Displays the battery level of the remote controller.

[6] Status LED

Displays the remote controller's system status.

[7] Power Button

Used to turn the remote controller on and off.

[8] RTH LED

Circular LED around the RTH button displays RTH status.

[9] Camera Settings Dial

Turn the dial to adjust camera settings. (Only functions when the remote controller is connected to a mobile device running the DJI GO 4 app.)

[10] Intelligent Flight Pause Button

Press once to allow the aircraft to exit from TapFly, ActiveTrack and other intelligent flight modes.

[11] Shutter Button

Two-stage button, press to take a photo.

[12] Flight Mode Switch

Switch between P-mode, S-mode, and A-mode.

[13] Video Recording Button

Press to start recording video. Press again to stop recording.

[14] Gimbal Dial

Use this dial to control the tilt of the gimbal.

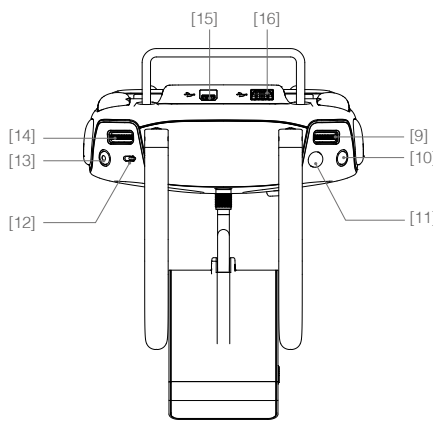

[15] Micro USB Port

Reserved port.

[16] USB Port

Connection to mobile device for DJI GO 4 app.

 © 2020 DJI All Rights Reserved.

[17] C1 Button

Customizable through the DJI GO 4 app.

[18] C2 Button

Customizable through the DJI GO 4 app.

[19] Power Port

Connect to the Charger to charge the battery of the remote controller.

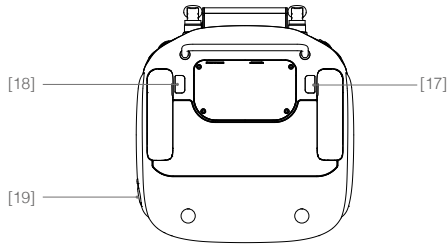

© 2020 DJI All Rights Reserved.

Aircraft

This section introduces the Flight Controller, Vision System, and the Intelligent Flight Battery.

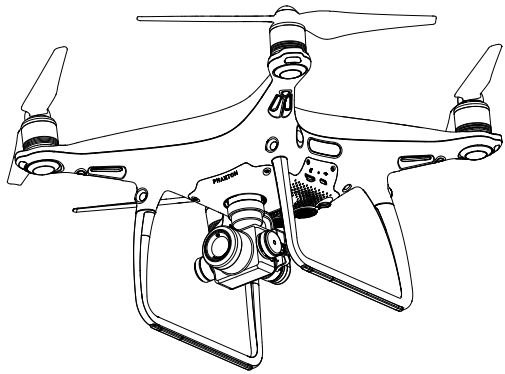

 © 2020 DJI All Rights Reserved.

Aircraft

Flight Controller

The Phantom 4 Pro / Pro+ flight controller features several important upgrades. Safety modes include Failsafe and Return-to-Home. These features ensure the safe return of your aircraft if the control signal is lost. The flight controller can also save critical flight data from each flight to the on-board storage device. The new flight controller also provides increased stability and a new air braking feature.

Flight Mode

Three flight modes are available. The details of each flight mode are found below:
P-mode (Positioning): P-mode works best when the GPS signal is strong. The aircraft utilizes GPS, stereo Vision System and Infrared Sensing System to stabilize, avoid obstacles or track moving subjects. Advanced features such as TapFly and ActiveTrack are enabled in this mode.

When the Forward Vision System is enabled and lighting conditions are sufficient, the maximum flight attitude angle is 25° with a maximum flight speed of 31 mph (50 kph). When forward obstacle sensing are disabled, the maximum flight attitude angle is 35° and the maximum flight speed is 36 mph (58 kph).

When the GPS signal is weak and lighting conditions are too dark for the Forward and Downward Vision Systems, the aircraft will only use its barometer for positioning to control altitude.

Note: P-mode requires larger stick movements to achieve high speeds.

S-mode (Sport): The handling gain values of the aircraft are adjusted to enhance aircraft maneuverability. The maximum flight speed of the aircraft is increased to 45mph (72kph). Note that Obstacle Sensing systems are disabled in this mode.

A-mode (Attitude): When neither the GPS nor the Vision System is available, the aircraft will only use its barometer for positioning to control the altitude.

- **The forward and rear Vision System are disabled in S-mode (Sport), which means the aircraft will not be able to automatically avoid obstacles in its flight path. Be vigilant and stay clear of nearby obstacles.**
- The aircraft's maximum speed and braking distance are significantly increased in S-mode (Sport). A minimum braking distance of 164 feet (50 meters) is required in windless conditions.
- The aircraft's responsiveness is significantly increased in S-mode (Sport), which means a small stick movement on the remote controller will translate into a large travel distance of the aircraft. Be vigilant and maintain adequate maneuvering space during flight.
- The aircraft's descent speed is significantly increased in S-mode (Sport). A minimum braking distance of 164 feet (50 meters) is required in windless conditions.

- Use the Flight Controller mode switch to change the flight mode of the aircraft.

Atti Mode Warning

The aircraft will enter A-mode in the following two instances:
Passive: When there is weak GPS signal or when the compass experiences interference where the Vision System is unavailable.
Active: Users toggle the flight mode switch to A-mode.

In A-mode, the Vision System and some advanced features are disabled. Therefore, the aircraft cannot position or auto-brake in this mode and is easily affected by its surroundings, which may result in horizontal shifting. Use the remote controller to position the aircraft.

Maneuvering the aircraft in A-mode can be difficult. Before switching the aircraft into A-mode, make sure you are comfortable flying in this mode. DO NOT fly the aircraft too far away as you might lose control and cause a potential hazard.
Avoid flying in areas where GPS signal is weak, or in confined spaces. The aircraft will otherwise be forced to enter A-mode, leading to potential flight hazards, please land it in a safe place as soon as possible.

© 2020 DJI All Rights Reserved.

Flight Status Indicator

The Phantom 4 Pro / Pro+ has Front LEDs and Aircraft Status Indicators. The positions of these LEDs are shown in the figure below:

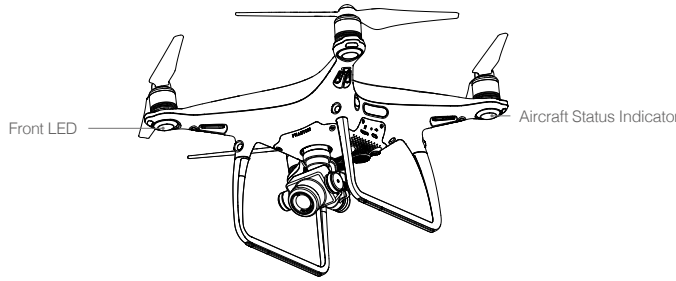

The Front LEDs show the orientation of the aircraft. The Front LEDs glow solid red when the aircraft is turned on to indicate the front (or nose) of the aircraft. The Aircraft Status Indicators communicate the system status of the flight controller. Refer to the table below for more information about the Aircraft Status Indicators.

Aircraft Status Indicator Description

Normal	
R-G-Y ····· Alternate red, green and yellow flashing	Turning On and Self Diagnostic Testing
G-Y ····· Alternate green and yellow flashing	Warming Up
G ····· Slow green flashing	P-mode with GPS
G ×2 ····· Two green flashes	P-mode with Vision System
Y ····· Slow yellow flashing	A-mode but No GPS or Vision System
G ····· Fast green flashing	Braking
Warning	
Y ····· Fast yellow flashing	Remote Controller Signal Lost
R ····· Slow red flashing	Low Battery Warning
R ····· Fast red flashing	Critical Battery Warning
R ····· Red flashing	IMU Error
R —— Solid Red	Critical Error
R-Y ····· Alternate red and yellow flashing	Compass Calibration Required

 © 2020 DJI All Rights Reserved.

Return-to-Home (RTH)

Return-to-Home (RTH) function brings the aircraft back to the last recorded Home Point. There are three types of RTH: Smart RTH, Low Battery RTH, and Failsafe RTH. This section describes these three scenarios in detail.

	GPS	Description
Home Point		If a strong GPS signal was acquired before takeoff, the Home Point is the location from which the aircraft launched. The GPS signal strength is indicated by the GPS icon (Less than 4 bars is considered a weak GPS signal). The aircraft status indicator will blink rapidly when the home point is recorded.

- The aircraft can sense and avoid obstacles when the Forward Vision System is enabled and lighting conditions are sufficient. The aircraft will automatically climb up to avoid obstacles and descend slowly as it returns to the home point. To ensure the aircraft returns home forwards, it cannot rotate or fly left and right during RTH while the Forward Vision System is enabled.

Failsafe RTH

The Forward Vision System allows the aircraft to create a real-time map of its flight route as it flies. If the Home Point was successfully recorded and the compass is functioning normally, Failsafe RTH will be automatically activated if the remote controller signal is lost for more than three seconds. The aircraft will plan its return route and retrace its original flight route home. The aircraft will hover for 10 seconds at its current location. When it regains signal connection it will wait for pilot commands. The Return-to-Home process may be interrupted and the pilot given control of the aircraft if the remote controller signal connection is re-established.

Failsafe Illustration

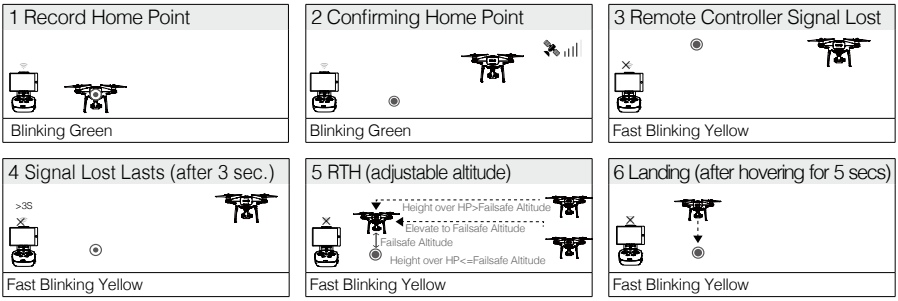

- Aircraft cannot return to the Home Point when GPS signal is weak ([ ] displays grey) or unavailable.
- When the RTH altitude is set to more than 65 ft (20 m) and the aircraft is ascending between 65 ft (20 m) and the preset RTH altitude, the aircraft will stop ascending and immediately return to the Home Point if you push the throttle stick. The aircraft automatically descends and lands if RTH is triggered when the aircraft flies within a 65ft (20m) radius of the Home Point.
- The aircraft cannot avoid obstruction during Failsafe RTH if Forward Vision System is disabled. It is important to set a suitable Failsafe altitude before each flight. Launch the DJI GO 4 app, tap GO FLY and tap to set the Failsafe Altitude.
- User cannot control the aircraft while the aircraft is ascending to 65 feet (20 meters) from the current altitude. However, user can press RTH button once to exit ascending and regain control.

© 2020 DJI All Rights Reserved.

Smart RTH

Use the RTH button on the remote controller or tap the RTH button in the DJI GO 4 app and follow the on-screen instructions when GPS is available to initiate Smart RTH. The aircraft will then automatically return to the last recorded Home Point. Use the remote controller to control the aircraft's speed or altitude to avoid a collision during the Smart RTH process. As the aircraft returns, it will use the primary camera to identify obstacles as far as 300m in front, allowing it to plan a safe route home. Press and hold the Smart RTH button once to start the process, and press the Smart RTH button again to terminate the procedure and regain full control of the aircraft.

Low Battery RTH

The low battery level failsafe is triggered when the DJI Intelligent Flight Battery is depleted to a point that may affect the safe return of the aircraft. Users are advised to return home or land the aircraft immediately when prompted. The DJI GO 4 app will display a notice when a low battery warning is triggered. The aircraft will automatically return to the Home Point if no action is taken after a ten-second countdown. The user can cancel the RTH procedure by pressing the RTH button on the remote controller. The thresholds for these warnings are automatically determined based on the aircraft's current altitude and distance from the Home Point.

The aircraft will land automatically if the current battery level can only support the aircraft long enough to descend from its current altitude. The user can still use the remote controller to alter the aircraft's orientation during the landing process.

The Battery Level Indicator is displayed in the DJI GO 4 app, and is described below:

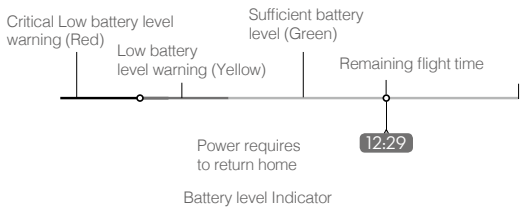

Battery Level Warning	Remark	Aircraft Status Indicator	DJI GO 4 App	Flight Instructions
Low battery level warning	Battery power is low. Land the aircraft.	Aircraft status indicator blinks RED slowly.	Tap "Go-home" to have the aircraft return to the Home point and land automatically, or "Cancel" to resume normal flight. If no action is taken, the aircraft will automatically go home and land after 10 seconds. Remote controller will sound an alarm.	Fly the aircraft back and land it as soon as possible, then stop the motors and replace the battery.
Critical Low battery level warning	The aircraft must land immediately.	Aircraft status indicator blinks RED quickly.	The DJI GO 4 app display will flash red and the aircraft will start to descend. The remote controller will sound an alarm.	Allow the aircraft to descend and land automatically.

 © 2020 DJI All Rights Reserved.

Estimated remaining flight time	Estimated remaining flight based on current battery level.	N/A	N/A	N/A

- When the Critical low battery level warning is triggered and the aircraft begins to land automatically, push the left stick upward to make the aircraft hover at its current altitude, giving you an opportunity to navigate to a more appropriate landing location.
- The colored zones and markers on the battery level indicator bar reflect the estimated remaining flight time. They are automatically adjusted according to the aircraft's current location and status.

Precision Landing

The Phantom 4 Pro / Pro+ automatically scans and attempts to match the terrain features underneath during Return to Home. When current terrain matches home point terrain, the Phantom 4 Pro / Pro+ will start landing immediately to achieve precision landing. The DJI GO 4 app will show a terrain feature mismatch prompt if matching fails.

- Precision Landing performance is subject to the following conditions:
  a) Home point is recorded upon take off, and cannot not be refreshed during flight.
  b) Aircraft must take off vertically. Take off altitude must be greater than 7 meters.
  c) Home point terrain features remain largely unchanged.
  d) Home point terrain with no distinctive features will affect the performance.
  e) Lighting conditions cannot be too light nor too dark.
- The following actions are available during landing:
  a) Pull throttle down to accelerate landing.
  b) Moving the control sticks in any other direction will stop Precision Landing. The Phantom 4 Pro / Pro+ will descend vertically and Landing Protection will remain active.

Failsafe Safety Notices

	The aircraft cannot avoid obstruction during the Failsafe RTH when the Forward Vision System is disabled. Therefore, it is important to set a suitable Failsafe altitude before each flight. Launch the DJI GO 4 app, tap GO FLY and tap ⌘ to set the Failsafe Altitude.
	If the aircraft is flying under 65 feet (20 meters) and Failsafe (including Smart RTH, Lower Battery RTH) is triggered, the aircraft will first automatically ascend to 65 feet (20 meters) from the current altitude. You can only cancel the ascending by exiting the Failsafe.
	Aircraft automatically descends and lands if RTH is triggered when the aircraft flies within a 65 feet (20 meters) radius of the Home Point. Aircraft will stop ascending and immediately return to the Home Point if you move the left stick if the aircraft reaches 65 feet (20 meters) altitudes or beyond during Failsafe.

© 2020 DJI All Rights Reserved.

	Aircraft cannot return to the Home Point when GPS signal is weak ([ ] displays grey) or unavailable.
	If you move the left stick after the aircraft rises above 65 feet (20 meters) but below the pre-set Failsafe RTH altitude, the aircraft will stop ascending and immediately return to the Home Point.

Obstacle Avoidance During RTH

Aircraft can now sense and actively attempt to avoid obstacles during RTH, provided that the lighting conditions are adequate for the Forward Vision System. Upon detecting an obstacle, the aircraft will act as follows:

1. The aircraft will use the primary camera to identify obstacles as far as 984 feet (300 meters) in front, allowing it to plan a safe route home.
2. The aircraft decelerates when an obstacle is sensed at 49 feet (15 meters) ahead.
3. The aircraft stops and hover then start ascending vertically to avoid the obstacle. Eventually, the aircraft will stop climbing when it is at least 16 feet (5 meters) above the detected obstacle.
4. Failsafe RTH procedure resume, the aircraft will continue flying to the Home Point at the current altitude.

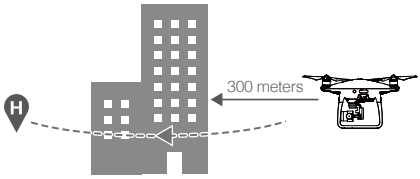

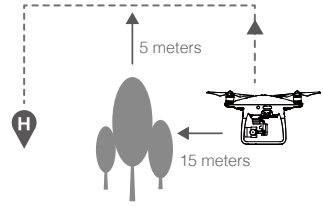

- The Obstacle Sensing function is disabled during RTH descent. Proceed with care.
- To ensure the aircraft returns home forwards, it cannot rotate during RTH while the Forward Vision System is enabled.
- The aircraft cannot avoid obstacles above, beside, or behind the aircraft.

Landing Protection Function

Landing Protection will activate during auto landing.

1. Landing Protection determines whether the ground is suitable for landing. If so, the Phantom 4 Pro / Pro+ will land gently.
2. If Landing Protection determines that the ground is not suitable for landing, the Phantom 4 Pro / Pro+ will hover and wait for pilot confirmation. The aircraft will hover if it detects the ground is not appropriate for landing even with a critically low battery warning. Only when the battery level decreases to 0% will the aircraft land. Users retain control of aircraft flight orientation.
3. If Landing Protection is inactive, the DJI GO 4 app will display a landing prompt when the Phantom 4 Pro / Pro+ descends below 0.3 meters. Tap to confirm or pull down the control stick for 2 seconds to land when the environment is appropriate for landing.

 © 2020 DJI All Rights Reserved.

- Landing Protection will not be active in the following circumstances:
  a) When the user is controlling the pitch/roll/throttle sticks (Landing ground detection will re-activate when control sticks are not in use)
  b) When the positioning system is not fully functional (e.g. drift position error)
  c) When the downward vision system needs re-calibration
  d) When light conditions are not sufficient for the downward vision system
- If an obstacle is within 1-meter of the aircraft, the aircraft will descend to 0.3m above the ground and hover. The aircraft will land upon with user confirmation.

Intelligent Flight Mode

TapFly

Introduction

With the TapFly feature, users can now tap on the mobile device screen to fly in the designated direction without using the remote controller. The aircraft will automatically avoid obstacles it sees or brake and hover provided that the lighting is appropriate (< 300 lux) nor too bright (> 10,000 lux).

Using TapFly

Ensure the aircraft is in P-mode, then follow the steps below to use TapFly:

1. Take off and ensure the aircraft is flying at least 6 feet (2 meters) above the ground.

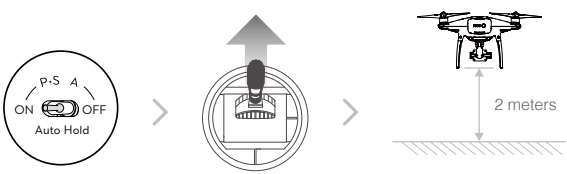

2. Launch the DJI GO 4 app and tap , then tap , read and understand the prompts.

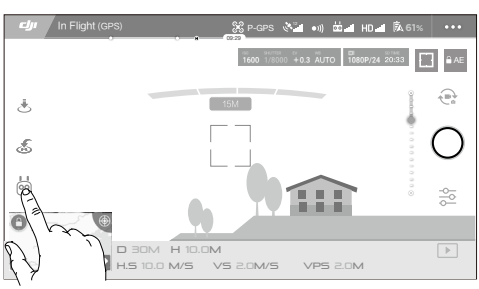

© 2020 DJI All Rights Reserved.

3. Tap once on the target direction and wait for GO icon to appear. Tap again to confirm the selection and the aircraft will automatically fly towards the target direction.

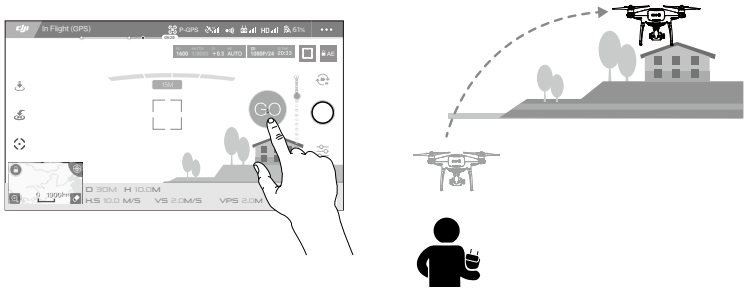

- DO NOT guide the aircraft to fly towards people, animals, small and fine objects (e.g. tree branches and power lines) or transparent objects (e.g. glass or water).
- Watch for the obstacles in the flight path and stay clear of them.
- There may be deviations between the expected and the actual flight path of TapFly selection.
- The selectable range for the target direction is limited. You cannot make a TapFly selection close to the upper or lower edge of the screen.
- TapFly Mode may not work properly when the aircraft is flying over water or snow covered areas.
- Be extra cautions when flying in dark (< 300 lux) or bright (>10,000 lux) environments.

After confirming the TapFly selection, the aircraft will fly in the direction marked by the ◯ icon. Note that you can still use the control stick to control the movement of the aircraft during the flight.

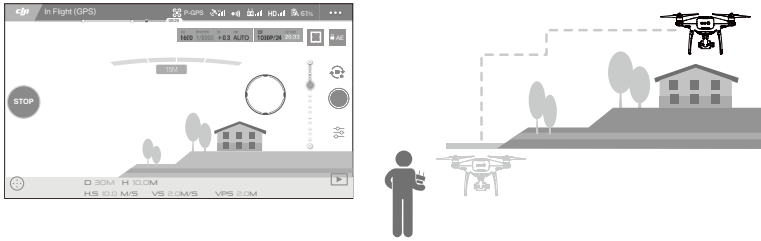

The aircraft will automatically adjust its speed when it senses an obstacle in front or if it is flying too close to the ground. However, this feature should not be relied upon for navigation between obstacles. Failsafe procedures will override TapFly. If the GPS signal weakens, the aircraft will exit autonomous flight and return to home.

 © 2020 DJI All Rights Reserved.

TapFly includes following functions:

TapFly Forward Mode	TapFly Backward Mode	Free Mode
		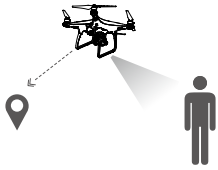
The aircraft will fly towards the target. Forward Vision System is active.	The aircraft will fly in the opposite direction of the target. Rear Vision System is active.	The aircraft will fly towards the target. The remote controller can be used to maneuver the yaw of the aircraft freely. Obstacle Sensing is disabled in this mode, use it in an unobstructed environment.

Exit TapFly

Use the following methods to exit TapFly:

1. Tap “STOP” button on the screen.
2. Pull back the pitch stick on the remote controller and hold for more than 3s.
3. Press the Intelligent Flight Pause button on the remote controller.

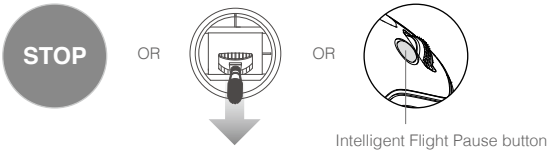

Aircraft will stop and hover after exiting from TapFly. Tap a new target direction to continue flying or begin manual flight.

ActiveTrack

ActiveTrack allows you to mark and track a moving object on your mobile device screen. The aircraft will automatically avoid obstacles in its flight path. No external tracking device is required.
The Phantom 4 Pro / Pro+ can automatically identify and trace bikes and other vehicles, people and animals, and use different tracking strategies for each.

© 2020 DJI All Rights Reserved.

Using ActiveTrack

Ensure the aircraft is in P-mode, then follow the steps below to use ActiveTrack:

1. Take off and hover at least 6 feet (2 meters) above the ground.

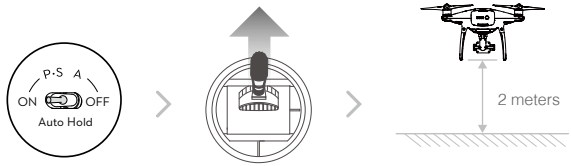

2. Launch the DJI GO 4 app and tap , then tap , read and understand the prompts.

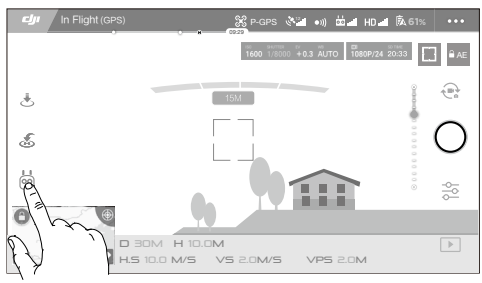

3. Tap on the subject you want to track then tap to confirm selection. If the subject is not automatically recognized, drag a box around it. The box will turn green when tracking is in progress. If the box turns red, the object could not be identified and you should try again.

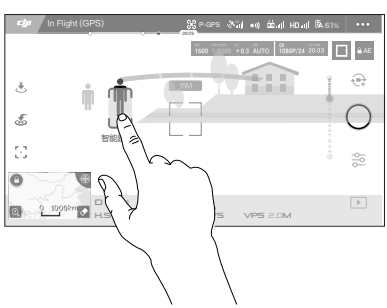

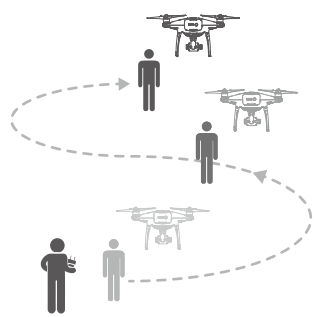

 © 2020 DJI All Rights Reserved.

- DO NOT select an area containing people, animals, small, fine objects (e.g. tree branches and power lines) or transparent objects (e.g. glass or water surface).
- Stay clear of obstacles near the flight path, particularly when the aircraft is flying backward.
- Be extra vigilant when using ActiveTrack in any of the following situations:
  a) The tracked subject is not moving on a level plane.
  b) The tracked subject changes shape drastically while moving.
  c) The tracked subject could be blocked or out of sight for a long time.

ActiveTrack includes following functions:

Trace	Spotlight	Profile
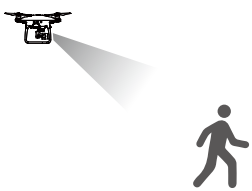	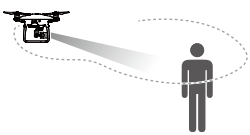	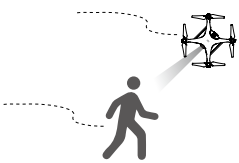
The aircraft tracks the subject at a constant distance. Use the roll stick on the remote controller or the slider in DJI GO 4 to circle the subject.	Aircraft will not trace a subject automatically, but it keeps the camera pointing at the subject during flight. The remote controller can be used to maneuver the aircraft, but yaw is disabled. Using the left stick and gimbal dial will adjust subject framing.	The aircraft tracks the subject at constant angle and distance from the side. Use the roll stick on the remote control to circle the subject.

- DO NOT select an area containing people, animals, small, fine objects (e.g. tree branches and power lines) or transparent objects (e.g. glass or water).
- Stay clear of obstacles near the flight path, particularly when the aircraft is flying backward.
- Be extra vigilant when using ActiveTrack in any of the following situations:
  a) The tracked subject is not moving on a level plane.
  b) The tracked subject changes shape drastically while moving.
  c) The tracked subject could be blocked or out of sight for a long time.
  d) The tracked subject is moving on a snowy surface.
  e) Available light is low (< 300 lux) or high (> 10,000 lux).
  f) The tracked subject has a similar color or pattern as its surrounding environment.
- You must follow local privacy laws and regulations when using ActiveTrack.
- Aircraft will not be able to avoid obstacles while in Profile or Spotlight Mode. Use these modes in open areas.

- The aircraft will sense and avoid obstacles on its flight path.
- If the aircraft loses track of the subject, because it is moving too fast or obscured, re-select the subject to resume tracking.

© 2020 DJI All Rights Reserved.

Exiting ActiveTrack

Use the following methods to exit ActiveTrack:

1. Tap the “STOP” button on the screen.
2. Press the Intelligent Flight Pause button on the remote controller.

After exiting ActiveTrack, the aircraft will hover in place, at which point you may choose to fly manually, track another subject, or return to home.

Draw

Introduction

Using Draw, the aircraft will fly along the flight path drawn on-screen. As it flies it will automatically brake and hover when it sees obstacles provided that the lighting is appropriate - no darker than 300 lux nor brighter than 10,000 lux.

Using Draw

Ensure the aircraft is in P-mode, then follow the steps below to use Draw:

1. Take off and hover at least 6 feet (2 meters) above the ground.

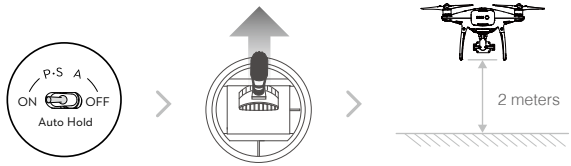

2. Launch the DJI GO 4 app and tap , then tap , read and understand the prompts.

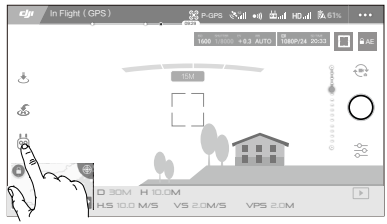

3. Draw a line on the screen to create a path. Tap GO and the aircraft will fly along the path.

 © 2020 DJI All Rights Reserved.

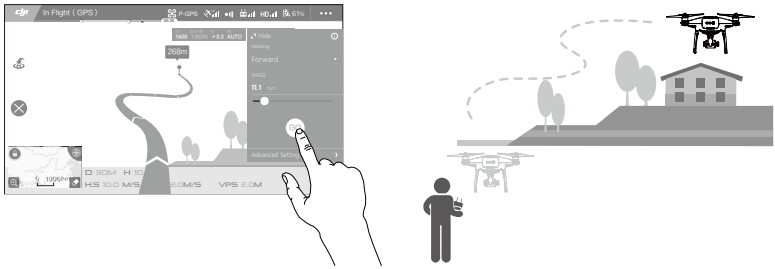

⚠ • DO NOT fly the aircraft towards people, animals, or small/fine objects (e.g. tree branches and power lines) or transparent objects (e.g. glass or water).
• There may be some deviation between the expected and the actual flight path.

After confirming the flight path, the aircraft will fly along the path on-screen. Note: Control sticks can be used to control aircraft movement during the flight.

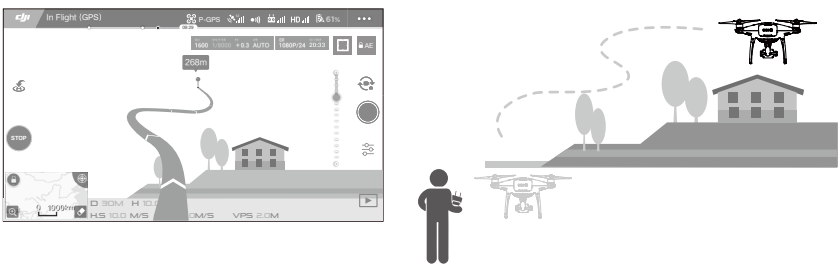

The aircraft will automatically adjust its speed when it senses an obstacle in front or if it is flying too close to the ground. However, this feature should not be relied upon for navigation between obstacles.
Failsafe procedures will override Draw. If the GPS signal weakens, the aircraft will exit autonomous flight and return to home.

Exit Draw

Use the following methods to exit Draw:
1. Tap the “STOP” button on the screen.
2. Pull back the pitch stick on the remote controller and hold for more than 3s.
3. Press the Intelligent Flight Pause button on the remote controller.

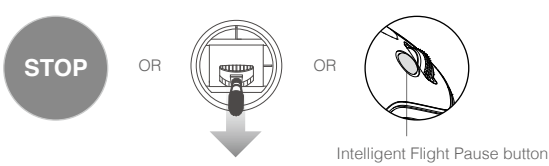

Aircraft will stop and hover after exiting from Draw. Draw a new flight path to continue flying or begin manual flight.

© 2020 DJI All Rights Reserved.

Gesture Mode

In Gesture Mode, the Phantom 4 Pro / Pro+'s Vision System recognizes gestures, allowing it to follow and capture selfies without a phone or a controller. Follow the steps below to use Gesture Mode:

Modes	Prompts	Front LEDs	Remarks
1. Confirm the subject		Ⓡ ····· Slow Red Flashing	Ensure the forward vision system is active and there is enough light. Tap the icon and move in front of the camera for the Phantom 4 Pro / Pro+ to recognize you.
2. Confirm the distance		Ⓡ ×2 ····· Red Flashes Twice	Raise your arms and wave to the Phantom 4 Pro / Pro+, the Front LEDs will blink red twice once it confirms the shooting distance.
3. Selfie Count Down		Ⓡ ····· Fast Red Flashing	Put your fingers in front on your face as shown.

⚠
- Gesture Mode can only be used in Photo Mode.
- Fly the aircraft 2 meters or higher above the ground then move in front of the camera to be recognized. Front LED Indicators will blink red rapidly if the Phantom 4 Pro / Pro+ fails to recognize a subject.
- Enabling GPS on your phone will allow the Phantom 4 Pro / Pro+ to follow with more accuracy while flying in Gesture Mode.

Tripod Mode

Tap the icon in the DJI GO 4 app to enable Tripod Mode. In Tripod Mode, the maximum flight speed is limited to 5.6 mph (9 kph) and the braking distance is reduced to 6.6 ft (2 m). Responsiveness to stick movements is also reduced for smoother more controlled movements.

⚠
- Only use Tripod Mode where the GPS signal is strong or light conditions are ideal for the vision system. If GPS signal is lost and the vision system cannot function, it will automatically switch to Atti mode. In this case, flight speed will increase and the aircraft cannot hover in place. Use Tripod Mode carefully.

Terrain Follow Mode

The Downward Vision System is utilized in Terrain Follow Mode to maintain a height above ground between 1 and 10 meters. This mode is designed for use on grassland sloped at no more than 20°.
Enable the Terrain Follow Mode by tapping the Intelligent Flight Mode icon in the DJI GO 4 app. When this mode is enabled, the aircraft's current height will be recorded. The aircraft will maintain the recorded height during flight and ascend when the slope rises. However, the aircraft will not descend in downward slopes.

 © 2020 DJI All Rights Reserved.

⚠ • It is important that you only fly in conditions where the Vision Position System can function correctly; otherwise the Terrain Follow Mode will not work.

Vision System and Infrared Sensing System

The main components of the Vision System are located on the front, rear and bottom of the Phantom 4 Pro / Pro+, including [1] [2] [3] three stereo vision sensors and [4] two ultrasonic sensors. The Vision System uses ultrasound and image data to help the aircraft maintain its current position, enabling precision hovering indoors or in environments where a GPS signal is not available. The Vision System constantly scans for obstacles, allowing the Phantom 4 Pro / Pro+ to avoid them by going over, around, or hovering. The Infrared Sensing System consists [5] of two 3D infrared modules on both sides of the aircraft. These scan for obstacles on both sides of the aircraft and is active in certain flight modes.

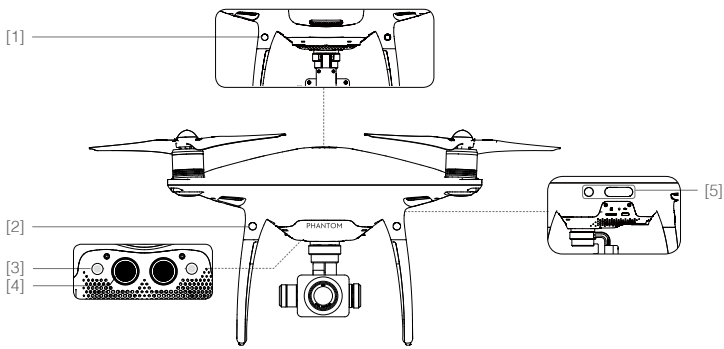

Detection Range

The detection range of the Vision System and Infrared Sensing System are depicted as follow. Note that the aircraft cannot sense and avoid the obstacles that are not within the detection range.

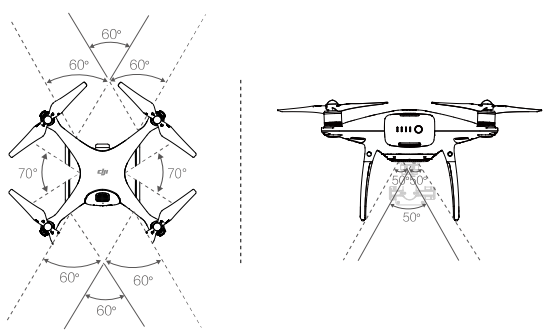

⚠ In P-mode, both the forward and the rear Vision Systems work if the speed is within 13mph (22kph). At higher speeds, only the vision system facing the direction of travel is active.

© 2020 DJI All Rights Reserved.

Calibrating Sensors

Vision Systems cameras installed on the aircraft are calibrated on delivery. However these cameras are vulnerable to excessive impact and will require occasional calibration via DJI ASSISTANT™ 2 or the DJI GO 4 app. Follow the steps below to calibrate the camera.

01
Point the aircraft toward the screen

02
Align the boxes

03
Pan and tilt the aircraft

Quick Calibration

Use quick calibration when the DJI GO 4 app notify that vision sensor calibration is required. Tap through “Aircraft Status” -> “Vision Sensors” to start quick calibration.

- Quick calibration is quick fix to vision sensor issues. Connecting the aircraft to a computer to carry out a full calibration using DJI Assistant 2 is recommended when possible. Only calibrate when lighting conditions are adequate and on textured surfaces i.e. grass.
- Do not calibrate the aircraft on highly reflective surfaces such as Marble or ceramics.

Using Vision Positioning

Vision Positioning is activated automatically when the aircraft is turned on. No further action is required. Vision Positioning is typically used in indoor environments, where GPS is unavailable. Using the sensors that are built into the Vision System, the aircraft can hover precisely even without GPS.

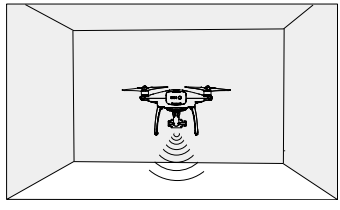

Follow the steps below to use Vision Positioning:

1. Toggle the flight mode switch to P-mode.
2. Place the aircraft on a flat surface. Note that the Vision System cannot work properly on surfaces without clear pattern variations.
3. Turn on the aircraft. The aircraft status indicator will flash green two times, which indicates the Vision Positioning is ready. Gently push the left stick up to lift off and the aircraft will hover in place.

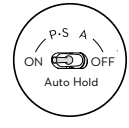

 © 2020 DJI All Rights Reserved.

Assisted Braking from Obstacle Sensing

Powered by the Obstacle Sensing, the aircraft will now be able to actively brake when obstacles are detected around the aircraft. Note that Obstacle Sensing function works best when lighting is adequate and the obstacle is clearly marked or textured. The aircraft must fly at no more than 31mph (50kph) to allow sufficient braking distance.

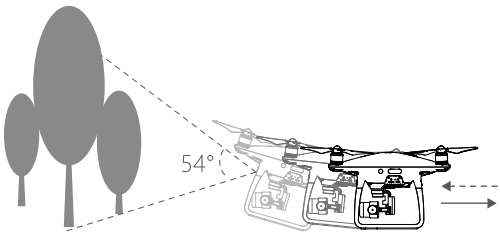

- **The 3D Infrared Sensing System is only active in Beginner mode and Tripod Mode. Fly with caution.**
- The performance of your Vision System and Infrared Sensing System are affected by the surface being flown over. Ultrasonic sensors may not be able to accurately measure distances when operating above sound-absorbing materials and the camera may not function correctly in suboptimal environments. The aircraft will switch from P-mode to A-mode automatically if neither GPS nor Vision System and Infrared Sensing System are available. Operate the aircraft with great caution in the following situations:
  a) Flying over monochrome surfaces (e.g. pure black, pure white, pure red, pure green).
  b) Flying over a highly reflective surfaces.
  c) Flying at high speeds of over 31mph (50kph) at 2 meters or over 11mph (18kph) at 1 meter.
  d) Flying over water or transparent surfaces.
  e) Flying over moving surfaces or objects.
  f) Flying in an area where the lighting changes frequently or drastically.
  g) Flying over extremely dark (lux < 10) or bright (lux > 100,000) surfaces.
  h) Flying over surfaces that can absorb sound waves (e.g. thick carpet).
  i) Flying over surfaces without clear patterns or texture.
  j) Flying over surfaces with identical repeating patterns or textures (e.g. tiling).
  k) Flying over inclined surfaces that will deflect sound waves away from the aircraft.
  l) Flying over obstacles with too small effective infrared reflective surface.
  m) DO NOT position the sides of two aircraft toward each other to avoid interference between the 3D infrared modules.
  n) DO NOT cover the protective glass of the infrared module. Keep it clean and undamaged.

- Keep sensors clean at all times. Dirt or other debris may adversely affect their effectiveness.
- Vision Positioning is only effective when the aircraft is at altitudes of 0.3 to 10 meters.
- The Vision Positioning may not function properly when the aircraft is flying over water.
- The Vision System may not be able to recognize pattern on the ground in low light conditions (less than 100 lux).
- Do not use other ultrasonic devices with frequency of 40 KHz when Vision System is in operation.

- Keep animals away from the aircraft when Vision Positioning is activated. The sonar sensor emits high frequency sounds that are audible to some animals.

© 2020 DJI All Rights Reserved.

Flight Recorder

Flight data is automatically recorded to the internal storage of the aircraft. This includes flight telemetry, aircraft status information, and other parameters. To access this data, connect the aircraft to the PC through the Micro USB port and launch the DJI Assistant 2.

Attaching and Detaching the Propellers

Use only DJI approved propellers with your Phantom 4 Pro / Pro+. The grey and black ring on the propeller indicate where they should be attached and in which direction whey should spin.

Propellers	Silver Ring	Black Ring
Figure		
Attach On	Motors without black dots	Motors with black dots
Legends	Lock : Turn the propellers in the indicated direction to mount and tighten. Unlock : Turn the propellers in the indicated direction to loosen and remove.	

Attaching the Propellers

1. Be sure to remove the warning stickers from the motors before attaching the propellers.
2. Mount the propellers with black propeller rings to the motors with black dots. Mount the propellers with sliver propeller rings to the motors without black dots. Press the propeller down onto the mounting plate and rotate in the lock direction until it is secured in its position.

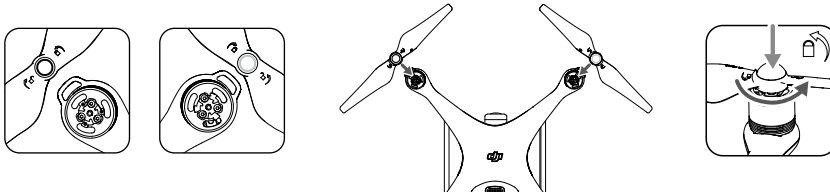

Black Edition

Black propeller rings go on motors without silver dots.

Silver propeller rings go on motors with silver dots.

Detaching the Propellers

Press the propellers down into the motor mount and rotate in the unlock direction.

 © 2020 DJI All Rights Reserved.

- Be aware of the sharp edges of the propellers. Handle with care.
- Use only the DJI approved propellers. Do not mix propeller types.
- Check that the propellers and motors are installed correctly and firmly before every flight.
- Ensure that all propellers are in good condition before each flight. DO NOT use aged, chipped, or broken propellers.
- To avoid injury, STAND CLEAR of and DO NOT touch propellers or motors when they are spinning.
- ONLY use original DJI propellers for a better and safer flight experience.

DJI Intelligent Flight Battery

The DJI Intelligent Flight Battery has a capacity of 5870 mAh, a voltage of 15.2 V, and a smart charge/discharge functionality. It should only be charged using an appropriate DJI approved charger.

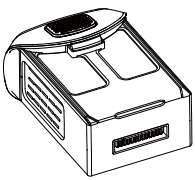

Intelligent Flight Battery

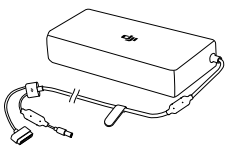

Charger

- The Intelligent Flight Battery must be fully charged before using it for the first time.
- Never insert or remove the battery when it is turned on.
- Ensure the battery is mounted firmly. The aircraft will not take off if the battery is mounted incorrectly.

DJI Intelligent Flight Battery Functions

1. Battery Level Display: The LED indicators display the current battery level.
2. Auto-Discharging Function: To prevent swelling, the battery automatically discharges to below 65% of total power when it is idle for more than ten days. It takes around two days to discharge the battery to 65%. It is normal to feel moderate heat being emitted from the battery during the discharge process. Discharge thresholds can be set in the DJI GO 4 app.
3. Balanced Charging: Automatically balances the voltage of each battery cell when charging.
4. Overcharge Protection: Charging automatically stops when the battery is fully charged.
5. Temperature Detection: The battery will only charge when the temperature is between 5°C (41°F) and 40°C (104°F).
6. Over Current Protection: The battery stops charging when a high amperage (more than 8 A) is detected.
7. Over Discharge Protection: To prevent over-discharge damage, discharging automatically stops when the battery voltage reaches 12 V.
8. Short Circuit Protection: Automatically cuts the power supply when a short circuit is detected.
9. Battery Cell Damage Protection: The DJI GO 4 app displays a warning message when a damaged battery cell is detected.
10. Sleep Mode: To save power, the battery enter sleep mode after 20 minutes of inactivity.
11. Communication: Information pertaining to the battery's voltage, capacity, current, etc. is transmitted to the aircraft's main controller.

© 2020 DJI All Rights Reserved.

⚠ Refer to *Phantom 4 Pro / Pro+ Intelligent Flight Battery Safety Guidelines* before use. Users take full responsibility for all operations and usage.

Using the Battery

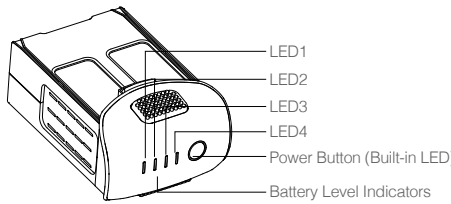

Turning ON/OFF

Turning On: Press the Power Button once, then press again and hold for 2 seconds to turn on. The Power LED will turn green and the Battery Level Indicators will display the current battery level.

Turning Off: Press the Power Button once, then press again and hold for 2 seconds to turn off. The battery power LED will flash when powering off the Phantom to allow automatically stopping of a recording during the event recording wasn't stopped.

Checking the Battery Level

The Battery Level Indicators display how much power remains. When the battery is turned off, press the Power Button once. The Battery Level Indicators will light up to display the current battery level. See below for details.

The Battery Level Indicators will also show the current battery level during charging and discharging. The indicators are defined below.

▯ : LED is on. ▯ : LED is flashing.

▯ : LED is off.

Battery Level Indicators				
LED1	LED2	LED3	LED4	Battery Level
▯	▯	▯	▯	87.5%~100%
▯	▯	▯	▯	75%~87.5%
▯	▯	▯	▯	62.5%~75%
▯	▯	▯	▯	50%~62.5%
▯	▯	▯	▯	37.5%~50%
▯	▯	▯	▯	25%~37.5%
▯	▯	▯	▯	12.5%~25%
▯	▯	▯	▯	0%~12.5%
▯	▯	▯	▯	=0%

 © 2020 DJI All Rights Reserved.

Low Temperature Notice:

1. Battery capacity is significantly reduced when flying in low temperature (< 0°C) environments.
2. It is not recommended that the battery be used in extremely low temperature (< -10°C) environments. Battery voltage should reach the appropriate level when operating environment with temperatures between -10°C and 5°C.
3. End the flight as soon as the DJI GO 4 app displays the "Low Battery Level Warning" in low temperature environments.
4. Keep the battery indoors to warm it before flying in low temperature environments.
5. To ensure optimal performance of the battery, keep the battery temperature above 20°C.
6. The charger will stop charging the battery if the battery cell's temperature is not within the operating range (0°C ~ 40°C).

⚠ In cold environments, insert the battery into the battery compartment and turn on the aircraft for approximately 1-2 minutes to warm up before taking off.

Charging the Intelligent Flight Battery

1. Connect the Battery Charger to a power source (100-240 V 50/60 Hz).
2. Connect the Intelligent Flight Battery to the Battery Charger to start charging. If the battery level is above 95%, turn on the battery before charging.
3. The Battery Level Indicator will display the current battery level as it is charging.
4. The Intelligent Flight Battery is fully charged when the Battery Level Indicators are all off.
5. Air-cool the Intelligent Flight Battery after each flight. Allow its temperature to drop to room temperature before storing it for an extended period.

⚠ • Always turn off the battery before inserting it or removing it from the Phantom 4 Pro / Pro+. Never insert or remove a battery when it is turned on.

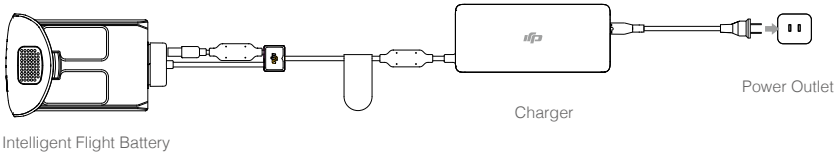

Battery Level Indicators While Charging				
LED1	LED2	LED3	LED4	Battery Level
▮	▯	▯	▯	0%~25%
▮	▮	▯	▯	25%~50%
▮	▮	▮	▯	50%~75%
▮	▮	▮	▮	75%~100%
▯	▯	▯	▯	Fully Charged

© 2020 DJI All Rights Reserved.

Battery Protection LED Display

The table below shows battery protection mechanisms and corresponding LED patterns.

Battery Level Indicators while Charging					
LED1	LED2	LED3	LED4	Blinking Pattern	Battery Protection Item
				LED2 blinks twice per second	Over current detected
				LED2 blinks three times per second	Short circuit detected
				LED3 blinks twice per second	Over charge detected
				LED3 blinks three times per second	Over-voltage charger detected
				LED4 blinks twice per second	Charging temperature is too low
				LED4 blinks three times per second	Charging temperature is too high

After these issues are resolved, press the Power Button to turn off the Battery Level Indicator. Unplug the Intelligent Flight Battery from the charger and plug it back in to resume charging. Note that you do not need to unplug and plug in the charger in the event of a room temperature error; the charger will resume charging when the temperature is within the allowable range.

⚠ DJI does not take any responsibility for damage caused by third-party chargers.

How to discharge your Intelligent Flight Battery:
Slow : Place the Intelligent Flight Battery into the Phantom 4's Pro / Pro+ Battery Compartment and turn it on. Leave it on until there is less than 8% of power left, or until the battery can no longer be turned on. Launch the DJI GO 4 app to check battery levels.
Rapid : Fly the Phantom 4 Pro / Pro+ outdoors until there is less than 8% of power left, or until the battery can no longer be turned on.

 © 2020 DJI All Rights Reserved.

Remote Controller

This section describes the features of the remote controller and includes instructions for controlling the aircraft and the camera.

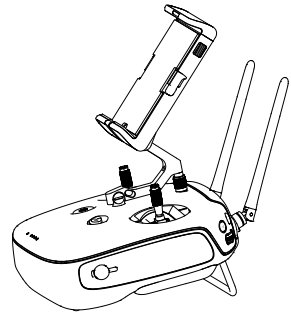

© 2020 DJI All Rights Reserved.

Remote Controller

Remote Controller Profile

The Phantom 4 Pro/Pro+ series remote controller is a multi-function wireless communication device that integrates a dual frequency video downlink system and the aircraft remote control system. The remote controller features a number of camera control functions, including photo/video capture and gimbal control. The battery level is displayed via LED indicators on the front panel of the remote controller.

For more stable and smooth video downlink, the Phantom 4 Pro/Pro+ remote controller uses Lightbridge technology. The Phantom 4 Pro/Pro+ remote controller uses the latest OcuSync technology, which also allows the Phantom 4 Pro+ V2.0 to connect with DJI Goggles series products wirelessly, offering a real-time aerial FPV experience. The Phantom 4 Pro+ series is equipped with a 5.5" screen to better adapt to outdoor shooting environments. It also has a built-in DJI GO 4 and various applications to support sharing your content anytime and anywhere.

- **Compliance Version:** The remote controller is compliant with local compliance and regulations.
- **Operating Mode:** Control can be set to Mode 1 or Mode 2, or to a custom mode.
- **Mode 1:** The right stick serves as the throttle.
- **Mode 2:** The left stick serves as the throttle.

⚠ To prevent transmission interference, do not operate more than three aircrafts in the same area.

Using the Remote Controller

Turning the Remote Controller On and Off

The Phantom 4 Pro / Pro+ remote controller is powered by a 2S rechargeable battery that has a capacity of 6000 mAh. The battery level is indicated via the Battery Level LEDs on the front panel. Follow the steps below to turn on your remote controller:

1. When the remote controller is turned off, press the Power Button once. The Battery Level LEDs will display the current battery level.
2. Press and hold the Power Button to turn on the remote controller.
3. The remote controller will beep when it is turned on. The Status LED will rapidly blink green, indicating that the remote controller is linking to the aircraft. The Status LEDs will glow solid green when linking is complete.
4. Repeat Step 2 to turn off the remote controller.

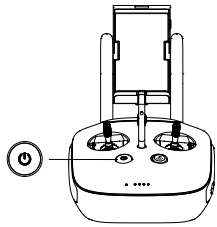

Charging the Remote Controller

Charge the remote controller using the included charger. Refer to the figure on next page below for more details.

 © 2020 DJI All Rights Reserved.

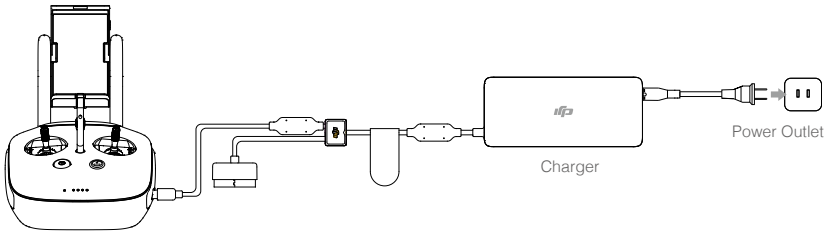

Controlling the Camera

Shoot videos/photos, and adjust camera settings via the Shutter Button, Record Button, and Camera Settings Dial on the remote controller.

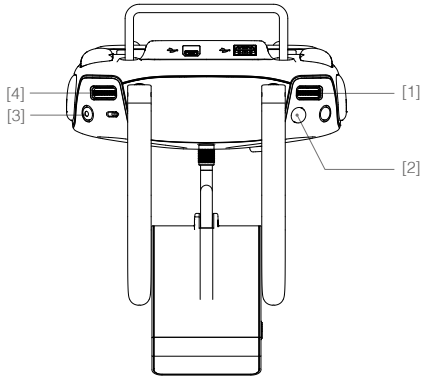

[1] Camera Settings Dial

Turn the dial to adjust camera settings such as ISO, shutter speed, and aperture without letting go of the remote controller. Press down on the dial to toggle between these settings.

[2] Shutter Button

Press to take a photo. If burst mode is activated, multiple photos will be taken with a single press.

[3] Video Recoding Button

Press once to start recording video, then press again to stop recording.

[4] Gimbal Dial

Control the tilt of the gimbal.

© 2020 DJI All Rights Reserved.

Controlling the Aircraft

This section explains how to control the orientation of the aircraft through the remote controller. Control can be set to Mode 1 , Mode 2 or Mode 3, or to a custom mode.

Mode 1

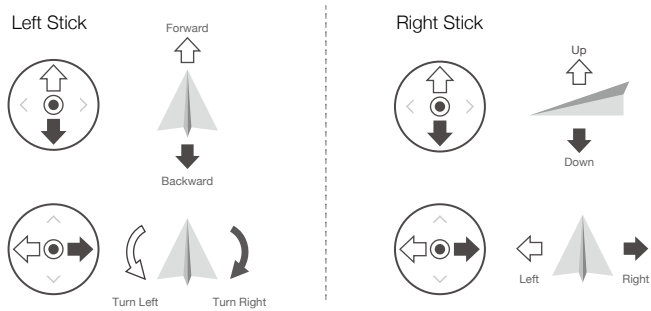

Mode 2

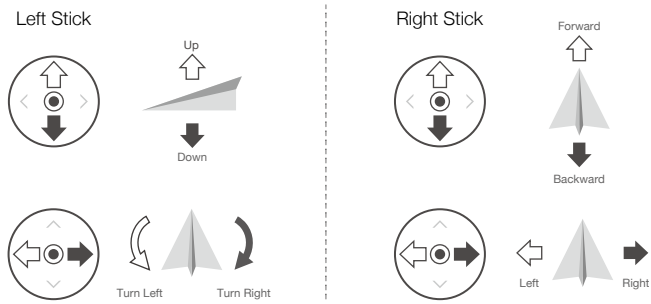

Mode 3

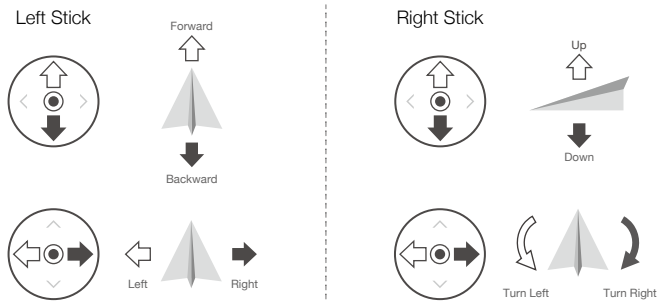

The Remote Control is set to Mode 2 by default.

Stick Neutral/Mid-Point: Control sticks are in the center position.
Moving the Control Stick: The control stick is pushed away from the center position.

 © 2020 DJI All Rights Reserved.

Remote Controller (Mode 2)	Aircraft (Indicates Nose Direction)	Remarks
	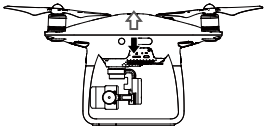	Moving the left stick up and down changes the aircraft's elevation. Push the stick up to ascend and down to descend. When both sticks are centered, the Phantom 4 Pro / Pro+ will hover in place. The more the stick is pushed away from the center position, the faster the Phantom 4 Pro / Pro+ will change elevation. Always push the stick gently to prevent sudden and unexpected elevation changes.
		Moving the left stick to the left or right controls the rudder and rotation of the aircraft. Push the stick left to rotate the aircraft counter-clockwise, push the stick right to rotate the aircraft clockwise. If the stick is centered, the Phantom 4 Pro / Pro+ will maintain its current orientation. The more the stick is pushed away from the center position, the faster the Phantom 4 Pro / Pro+ will rotate.
	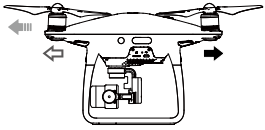	Moving the right stick up and down changes the aircraft's forward and backward pitch. Push the stick up to fly forward and down to fly backward. Phantom 4 Pro / Pro+ will hover in place if the stick is centered. Push the stick further away from the center position for a larger pitch angle (maximum 30°) and faster flight.
	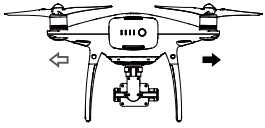	Moving the right stick control left and right changes the aircraft's left and right pitch. Push left to fly left and right to fly right. The Phantom 4 Pro / Pro+ will hover in place if the stick is centered.
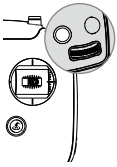	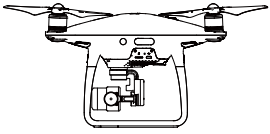	Press the Intelligent Flight Pause button once to exit from TapFly, ActiveTrack and other intelligent flight modes. The aircraft will hover at the current position.

© 2020 DJI All Rights Reserved.

Adjusting Controller Sticks

Hold and twist the controller sticks clockwise or counter clockwise to adjust the length of the controller sticks. A proper length of controller sticks can improve the controlling accuracy.

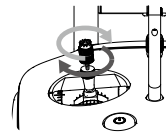

Flight Mode Switch

Toggle the switch to select the desired flight mode. Choose between; P-mode, S-mode and A- mode.

Position	Figure	Flight Mode
Position 1		P-mode
Position 2		S-mode
Position 3		A-mode

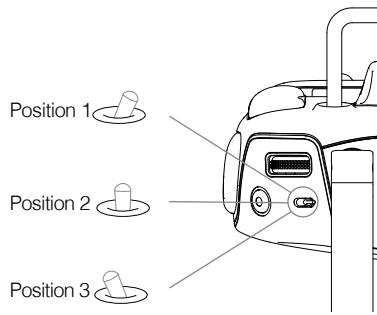

P-mode (Positioning): P-mode works best when the GPS signal is strong. The aircraft utilizes GPS, stereo Vision System and Infrared Sensing System to stabilize, avoid obstacles or track moving subjects. Advanced features such as TapFly and ActiveTrack are enabled in this mode.

S-mode (Sport): The handling gain values of the aircraft are adjusted to enhance aircraft maneuverability. The maximum flight speed of the aircraft is increased to 45mph (72kph). Note that Obstacle Sensing systems are disabled in this mode.

A-mode (Attitude): When neither the GPS nor the Vision System is available, the aircraft will only use its barometer for positioning to control the altitude.

The Flight Mode is locked in P Mode by default, regardless of switch position. To switch flight modes, go to Camera view in the DJI GO 4 app, tap and enable “Multiple Flight Modes”. After enabling multiple flight modes, toggle the switch to P and then to S to fly in Sport Mode.

RTH Button

Press and hold the RTH button to start the Return-to-Home (RTH) procedure. The LED ring around the RTH Button will blink white to indicate that the aircraft is entering RTH mode. The aircraft will then return to the last recorded Home Point. Press this button again to cancel the RTH procedure and regain control of the aircraft.

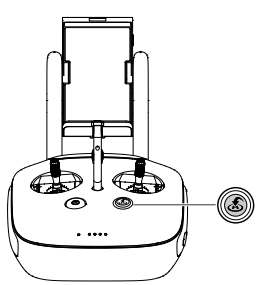

 © 2020 DJI All Rights Reserved.

Connecting Your Mobile Device

Tilt the mobile device holder to the desired position. Press the button on the side of the mobile device holder to release the clamp, and then place your mobile device into the cradle. Adjust the clamp down to secure the mobile device. To connect your mobile device to the remote controller using a USB cable, plug one end of the cable into your mobile device and the other end into the USB port on the back of the remote controller.

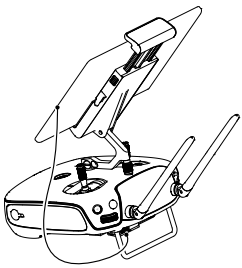

⚠ The Remote Controller of the Phantom 4 Pro+ includes a display device optimized for the DJI GO 4 app. No other mobile devices are required.

Optimal Transmission Range

The transmission signal between the aircraft and the remote controller is most reliable within the area that depicted below:

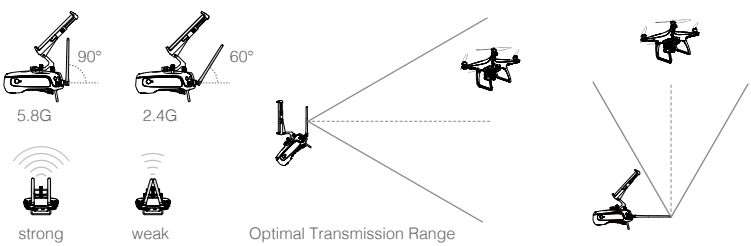

Ensure that the aircraft is flying within the optimal transmission zone. To achieve the best transmission performance, maintain the appropriate relationship between the operator and the aircraft.

Remote Controller Status LED

The Status LED reflects the strength of the connection between the remote controller and the aircraft. The RTH LED indicates the Return-to-Home status of the aircraft. The table below contains more information about these indicators.

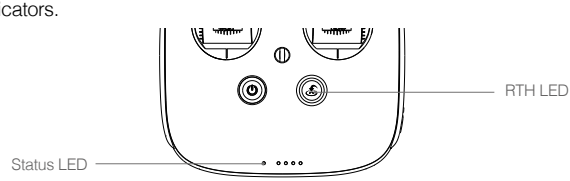

© 2020 DJI All Rights Reserved.

Status LED	Alarm	Remote Controller Status
Ⓡ —— Solid Red	♪ Chime	The remote controller is disconnected from the aircraft.
Ⓖ —— Solid Green	♪ Chime	The remote controller is connected to the aircraft.
Ⓡ ····· Slow Blinking Red	D-D-D·····	Remote controller error.
Ⓡ Ⓖ / Ⓡ Ⓨ ····· Red and Green/ Red and Yellow Alternate Blinks	None	HD downlink is disrupted.
RTH LED	**Sound**	**Remote Controller Status**
Ⓦ —— Solid White	♪ Chime	Aircraft is returning home.
Ⓦ ····· Blinking White	D · · ·	Sending Return-to-Home command to the aircraft.
Ⓦ ····· Blinking White	DD ·· ·· ··	Return-to-Home procedure in progress.

⚠ The Remote Controller Status Indicator will blink red and sound an alert, when the battery level is critically low.

Linking the Remote Controller

The remote controller is linked to your aircraft before delivery. Linking is only required when using a new remote controller for the first time. Follow these steps to link a new remote controller:

1. Turn on the remote controller and connect to the mobile device. Launch the DJI GO 4 app.
2. Turn on the Intelligent Flight Battery.
3. Select GO FLY and tap on and then tap “Linking RC” button as shown below.

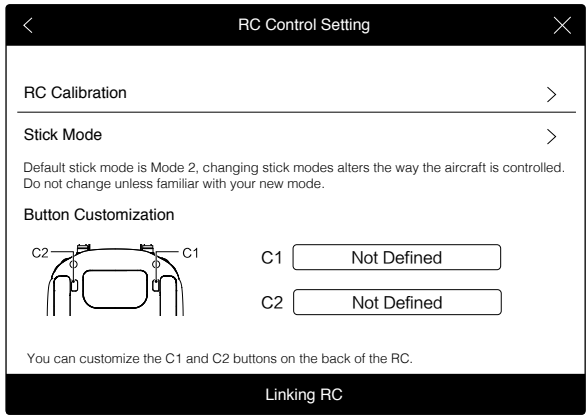

 © 2020 DJI All Rights Reserved.

4. The remote controller is ready to link. The Remote Controller Status Indicator blinks blue and a beep is emitted.

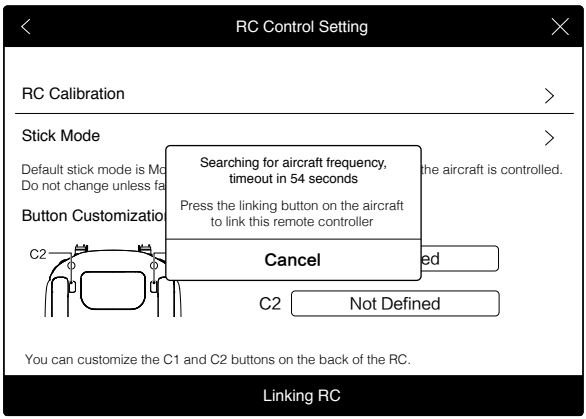

5. Locate the linking button on the side of the aircraft, as shown in the figure below. Press the link button to start linking. The Remote Controller Status Indicator LED will display a solid green once the remote controller is successfully linked to the aircraft.

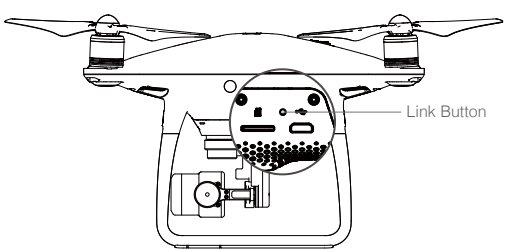

⚠ • The remote controller will un-link itself from an aircraft if a new remote controller is linked to the same aircraft.

© 2020 DJI All Rights Reserved.

Camera and Gimbal

This section provides the technical specifications of the camera and explains the gimbal's operation modes.

 © 2020 DJI All Rights Reserved.

Camera and Gimbal

Camera

Profile

The Phantom 4 Pro / Pro+ camera uses 1-inch CMOS sensor to capture video (up to 4096×2160p at 60fps) and 20 megapixel stills. Videos can be stored in either MOV or MP4 formats. Available picture shooting modes include burst, continuous, and time-lapse mode. A live preview of what the camera sees can be monitored on the connected mobile device via the DJI GO 4 app.

The Phantom 4 Pro / Pro+ supports the capture of 4K at 60fps. Both H.265 and H.264 are supported, with a maximum video bitrate of 100 Mbps.

The 20 megapixel photos taken by Phantom 4 Pro / Pro+ is the result of the application of advanced image processing technique. A variety of shooting modes deliver a better shooting experience. A mechanical shutter with a 1/2000 max speed eliminates rolling shutter distortion when capturing stills of fast moving objects.

Camera Micro SD Card Slot

To store your photos and videos, insert the Micro SD card into the slot as shown below before turning on the Phantom 4 Pro / Pro+. The Phantom 4 Pro / Pro+ comes with a 16 GB Micro SD card and supports Micro SD cards up to 128 GB. A UHS-1 and above Micro SD card is recommended due to their fast read and write speeds that support high-resolution video data.

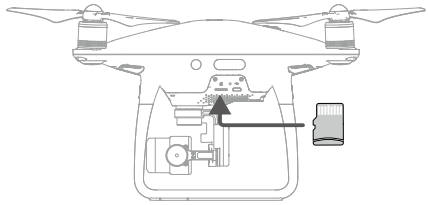

⊘	Do not remove the Micro SD card from the Phantom 4 Pro / Pro+ when it is shooting.
💡	To ensure the stability of the camera system, single video recordings are capped at 30 minutes.

Micro USB Port

Turn on the Phantom 4 Pro / Pro+ and connect a USB cable to the micro USB Port to update firmware.

© 2020 DJI All Rights Reserved.

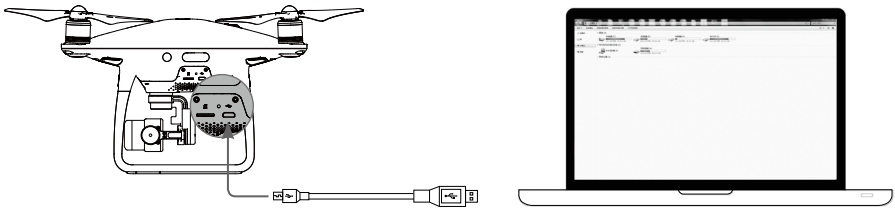

Camera Operation

Use the Shutter and Record buttons on the remote controller to shoot the photos or videos through the DJI GO 4 app.

Camera Status LED Indicator Descriptions

The Camera LED Indicator lights up after the flight battery is powered on. It provides information on the working status of the camera.

Camera LED Indicator		Camera status
G ·····	Green Fast Blink	System is warming up
G ——	Solid Green	The system is warmed up, the Micro SD card is inserted and working properly
G	Green Blink Once	Taking a single picture
G ×3 ·····	Green Blink 3 Times	Taking 3 or 5 photos per shot
R ·····	Slow Red Blink	Recording
R ·····	Fast Red Blink	Micro SD card error
R R ×2 ·····	Double Red Blink	Overheated Camera
R ——	Solid Red	System error
G R ·····	Green and Red Blink	Firmware Upgrading

 © 2020 DJI All Rights Reserved.

Gimbal

Profile

The 3-axis gimbal provides a steady platform for the attached camera, allowing you to capture clear, stable images and video. The gimbal can tilt the camera within a 120˚ range.

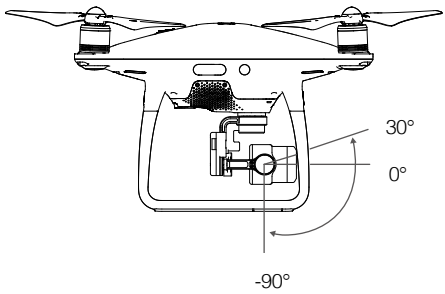

Use the gimbal dial on the remote controller to control the tilt movement of the camera. In the camera view, press and hold on the screen until a blue circle appears. Dragging the circle left and right will control the aircraft's orientation, and dragging the circle up and down will control the camera's tilt.

Gimbal Operation Modes

Two gimbal operation modes are available. Switch between the different operation modes on the camera settings page of the DJI GO 4 app. Note that your mobile device must be connected to the remote controller for changes to take effect. Refer to the table below for details:

	Follow Mode	The angle between the gimbal's orientation and aircraft's nose remains constant at all times.
	FPV Mode	The gimbal will synchronize with the movement of the aircraft to provide a first-person perspective flying experience.
	• A gimbal motor error may occur in these situations: (1) the aircraft is placed on uneven ground or the gimbal's motion is obstructed. (2) the gimbal has been subjected to an excessive external force, such as a collision. Please take off from flat, open ground and protect the gimbal at all times. • Flying in heavy fog or clouds may make the gimbal wet, leading to temporary failure. The gimbal will recover full functionality after it dries. • It is normal for the gimbal to produce a short beeping tone upon initialization. • In the case of less exposure time (no more than 1/200 second) or flight in S-mode with full remote controller stick movement, the aerodynamic vibration of the aircraft may increase due to aerodynamic forces. This can make the gimbal more susceptible to wind, causing photos to show a noticeable dynamic deformation (i.e., the "rolling shutter" effect). In such cases, it is suggested to increase the exposure time by using the filter or reducing the lens aperture, or reduce flying with smaller remote controller stick movement for better picture performance.	

© 2020 DJI All Rights Reserved.

DJI GO 4 App

This section introduces the four main functions of the DJI GO 4 app.

 © 2020 DJI All Rights Reserved.

DJI GO 4 App

The DJI GO 4 app is a mobile application designed specifically for DJI equipment. Use this app to control the gimbal, camera, and other aircraft functions. The app features Equipment, Editor, SkyPixel and Me sections, which are used for configuring your aircraft, editing and sharing your photos and videos with others. It is recommended that you use a tablet for the best experience.

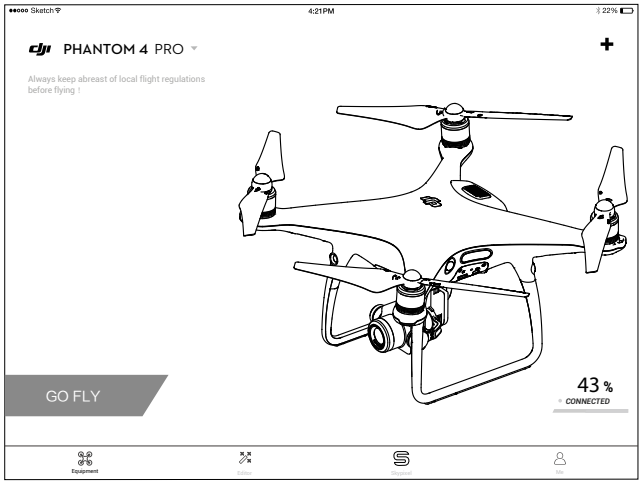

Equipment

Enter Camera View by tapping Camera on the DJI GO 4 welcome screen.

Camera View

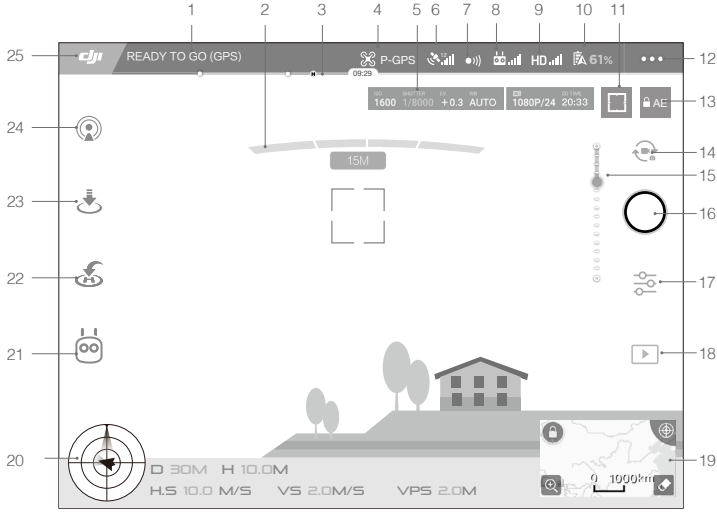

© 2020 DJI All Rights Reserved.

1. System Status

   READY TO GO (GPS) : This icon indicates aircraft flight status and various warning messages.

2. Obstacles Detection Status

   : Red bars are displayed when obstacles are close to the aircraft. Orange bars are displayed when obstacles are in detection range.

3. Battery Level Indicator

   : The battery level indicator provides a dynamic display of the battery level. The colored zones on the battery level indicator represent the power levels needed to carry out different functions.

4. Flight Mode

   : The text next to this icon indicates the current flight mode.
   Tap to configure the MC (Main Controller) Settings. These settings allow you to modify flight limits and set gain values.

5. Camera Parameters

   Displays camera settings parameters and capacity of the Micro SD card.

   ISO 1600 SHUTTER 1/8000 EV +0.3 WB AUTO | 1080P/24 SD TIME 20:33

6. GPS Signal Strength

   : Shows the current GPS signal strength. White bars indicate adequate GPS strength.

7. Obstacle Sensing Function Status

   : Tap into this button to enable or disable features provided by the Vision System.

8. Remote Controller Signal Strength

   : This icon shows the strength of the remote controller signal.

9. HD Video Link Signal Strength

   HD : This icon shows the strength of the HD video downlink connection between the aircraft and the remote controller.

10. Battery Level

    61% : This icon shows the current battery level.
    Tap to view the battery information menu, set the various battery warning thresholds, and view the battery warning history.

11. Focus/Metering Button

    / : Tap to switch between focus and metering mode. Tap to select object for focusing or metering.

12. General Settings

    ••• : Tap to enter general setting menu for setting metrics, enabling livestream, display flight routes and so on.

 © 2020 DJI All Rights Reserved.

13. Auto Exposure Lock

AE : Tap to lock the exposure value.

14. Photo/Video Button

: Tap to switch between photo and video recording modes.

15. Gimbal Slider

: Displays the pitch of the gimbal.

16. Shoot / Record Button

/ : Tap to start shooting photos or recording video.

17. Camera Settings

: Tap to set ISO, shutter and auto exposure values of the camera.

18. Playback

: Tap to enter the playback page and preview photos and videos as soon as they are captured.

19. Map

Tap the Mini Map to switch between Camera View and Map View.

20. Flight Telemetry

Flight Attitude and Radar Function:

The aircraft's flight attitude is indicated by the target-like icon.

(1) The red arrow shows which direction the aircraft is facing.

(2) The ratio of the grey area to the blue area indicates the aircraft's pitch.

(3) The horizontal level of the grey area indicates the aircraft's roll angle.

Flight Parameters:

Altitude: Vertical distance from the Home Point.

Distance: Horizontal distance from the Home Point.

Vertical Speed: Movement speed across a vertical distance.

Horizontal Speed: Movement speed across a horizontal distance.

Aircraft Distance:

The horizontal distance between the aircraft and the operator.

© 2020 DJI All Rights Reserved.

21. Intelligent Flight Mode
    : Display the current mode. Tap to select Intelligent Flight Mode.

22. Smart RTH
    : Initiate RTH home procedure. Tap to have the aircraft return to the last recorded home point.

23. Auto Takeoff/Landing
    / : Tap to initiate auto takeoff or landing.

24. Livestream
    : This icon indicates the current video feed is being broadcast live on YouTube. Ensure that mobile data service is available on your mobile device.

25. Back
    : Tap this icon to return to the main menu.

Editor

An intelligent video editor is built into the DJI GO 4 app. After recording several video clips and downloading them to your mobile device, go to Editor on the home screen. You can then select a template and a specified number of clips which are automatically combined to create a short film that can be shared immediately.

SkyPixel

Find out about our latest events, featured products and trending Skypixel uploads in the SkyPixel page.

Me

If you already have a DJI account, you will be able to participate in forum discussions, earn Credits in the DJI Store, and share your artwork with the community.

 © 2020 DJI All Rights Reserved.

Flight

This section describes safe flight practices and flight restrictions.

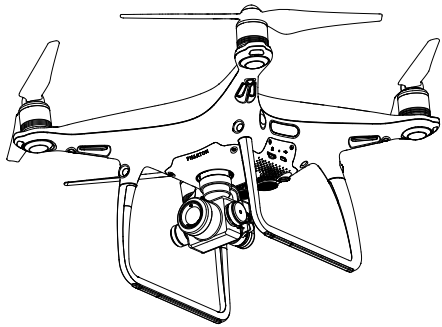

© 2020 DJI All Rights Reserved.

Flight

Once pre-flight preparation is complete, it is recommended that you use the flight simulator in the DJI GO 4 app to hone your flight skills and practice flying safely. Ensure that all flights are carried out in an open area.

Flight Environment Requirements

1. Do not use the aircraft in severe weather conditions. These include wind speeds exceeding 10 m/s , snow, rain and fog.
2. Only fly in open areas. Tall structures and large metal structures may affect the accuracy of the on-board compass and GPS system.
3. Avoid obstacles, crowds, high voltage power lines, trees, and bodies of water.
4. Minimize interference by avoiding areas with high levels of electromagnetism, including base stations and radio transmission towers.
5. Aircraft and battery performance is subject to environmental factors such as air density and temperature. Be very careful when flying at altitudes greater than 19, 685 feet (6000 meters) above sea level, as the performance of the battery and aircraft may be affected.
6. The Phantom 4 Pro / Pro+ cannot operate within the polar areas.

Flight Limits and GEO Zones

All unmanned aerial vehicle (UAV) operators should abide by all regulations set forth by government and regulatory agencies including the ICAO and the FAA. For safety reasons, flights are limited by default, which helps users operate this product safely and legally. Flight limitations include height limits, distance limits, and GEO zones.
When operating in P-mode, height limits, distance limits, and GEO zones function concurrently to manage flight safety. In A-mode, only height limits are in effect, which by default prevent the aircraft altitude from exceeding 1640 feet (500 m) .

Maximum flight altitude & Radius Limits

Maximum flight altitude and radius limits may be changed in the DJI GO 4 app. Be aware that the maximum flight altitude cannot exceed 1640 feet (500 meters). In accordance with these settings, your Phantom 4 Pro / Pro+ will fly in a restricted cylinder, as shown below:

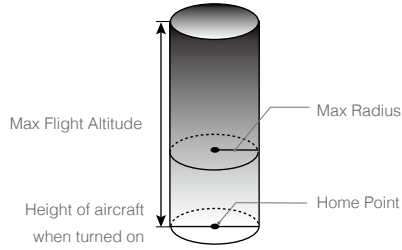

 © 2020 DJI All Rights Reserved.

GPS Signal Strong Ⓖ ····· Blinking Green			
	Flight Limits	DJI GO 4 App	Aircraft Status Indicator
Maximum Flight Altitude	Aircraft's altitude cannot exceed the specified value.	Warning: Height limit reached.	None.
Max Radius	Flight distance must be within the max radius.	Warning: Distance limit reached.	Rapid red flashing Ⓡ ····· when close to the max radius limit.

GPS Signal Weak Ⓨ ····· Blinking Yellow			
	Flight Limits	DJI GO 4 App	Aircraft Status Indicator
Maximum Flight Altitude	Height is restricted to 26 feet (8 meters) when the GPS signal is weak and Vision Positioning is activated. Height is restricted to 98 feet (30 meters) when the GPS signal is weak and Vision Positioning is inactivated.	Warning: Height limit reached.	None.
Max Radius	No limits		

⚠
- If the aircraft flies out of the limit, you can still control the aircraft, but you cannot fly it any farther.
- For safety reasons, please do not fly close to airports, highways, railway stations, railway lines, city centers, or other sensitive areas. Fly the aircraft only within your line of sight.

GEO Zones

All GEO zones are listed on the DJI official website at http://www.dji.com/flysafe. GEO zones are divided into different categories and include locations such as airports, flying fields where manned aircraft operate at low altitudes, borders between countries, and sensitive locations such as power plants.

© 2020 DJI All Rights Reserved.

Preflight Checklist

1. Remote controller, Intelligent Flight Battery, and mobile device are fully charged.
2. Propellers are mounted correctly and firmly.
3. Micro SD card has been inserted, if necessary.
4. Gimbal is functioning normally.
5. Motors can start and are functioning normally.
6. The DJI GO 4 app is successfully connected to the aircraft.
7. Ensure that the sensors for the Obstacle Sensing System are clean.

Calibrating the Compass

Only calibrate the compass when the DJI GO 4 app or the status indicator prompt you to do so. Observe the following rules when calibrating your compass:

- DO NOT calibrate your compass where there is a chance of strong magnetic interference, such as magnetite, parking structures, and steel reinforcements underground.
- DO NOT carry ferromagnetic materials with you during calibration such as cellular phones.
- The DJI GO 4 app will prompt you to resolve the compass issue if the compass is affected by strong interference after calibration is complete. Follow the prompted instructions to resolve the compass issue.

Calibration Procedures

Choose an open area to carry out the following procedures.

1. Tap the Aircraft Status Bar in the app and select “Calibrate”, then follow the on-screen instructions.
2. Hold the aircraft horizontally and rotate 360 degrees. The Aircraft Status Indicators will display a solid green light.

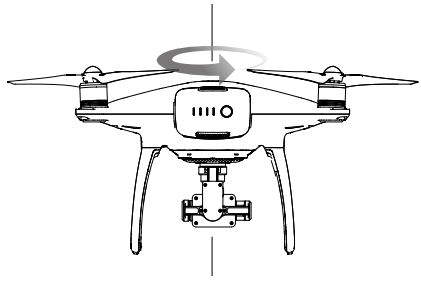

 © 2020 DJI All Rights Reserved.

3. Hold the aircraft vertically, with nose pointing downward, and rotate it 360 degrees around the center axis.

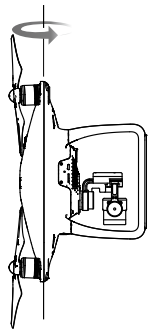

4. Re-calibrate the aircraft if the aircraft status indicators glows blinking red.

- If the Aircraft Status Indicator blinks red and yellow after the calibration procedure, move your aircraft to a different location and try again.

- DO NOT calibrate the compass near metal objects such as a metal bridge, cars, scaffolding.
- If the aircraft status indicators are blinking red and yellow alternately after placing the aircraft on the ground, the compass has detected magnetic interference. Change your location.

Auto Takeoff and Auto Landing

Auto Takeoff

Use auto takeoff only if the Aircraft Status Indicators are blinking green. Follow the steps below to use the auto takeoff feature:

1. Launch the DJI GO 4 app, tap GO FLY.
2. Complete all steps on the pre-flight checklist.
3. Tap“ ”, and confirm that conditions are safe for flight. Slide the icon to confirm and takeoff.
4. Aircraft takes off and hovers at (1.2 meters) above ground.

Aircraft Status Indicator blinks rapidly when it is using the Vision System for stabilization. The aircraft will automatically hover below 3 meters. It is recommended to wait until there is sufficient GPS lock before using the Auto Take-off feature.

Auto-Landing

Use auto-landing only if the Aircraft Status Indicator is blinking green. Follow the steps below to use the auto-landing feature:

1. Tap on , to ensure the landing condition is ideal. Slide to confirm.

© 2020 DJI All Rights Reserved.

2. Abort landing process immediately by using the ⓧ button on the screen.
3. a. When Landing Protection determines that the ground is suitable for landing, the Phantom 4 Pro / Pro+ will land gently.
   b. If Landing Protection determines that the ground is not suitable for landing, the Phantom 4 Pro / Pro+ will hover and wait for pilot confirmation.
   c. If Landing Protection is not operational, the DJI GO 4 app will display a landing prompt when the Phantom 4 Pro / Pro+ descends below 0.3 meters. Pull down on the throttle or use the auto landing slider to land.
4. Aircraft will land and turn off automatically.

Starting/Stopping the Motors

Starting the Motors

A Combination Stick Command (CSC) is used to start the motors. Push both sticks to the bottom inner or outer corners to start the motors. Once the motors have started spinning, release both sticks simultaneously.

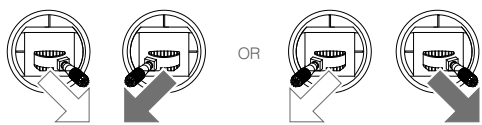

Stopping the Motors

There are two methods to stop the motors.

Method 1: When Phantom 4 Pro / Pro+ has landed, push the left stick down ①, then conduct the same CSC that was used to start the motors, as described above ②. Motors will stop immediately. Release both sticks once motors stop.

Method 2: When the aircraft has landed, push and hold the left stick down. The motors will stop after three seconds.

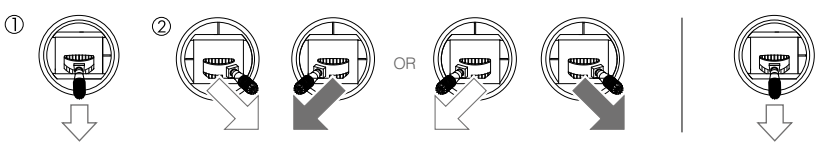

Method 1 Method 2

 © 2020 DJI All Rights Reserved.

Stop the Motor Mid-flight

Pull the left stick to the bottom inside corners and press the RTH button at the same time. **Only stop the motors mid-flight in emergency situations when doing so can reduce the risk of damage or injury.**

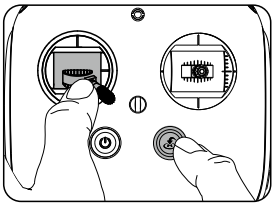

Flight Test

Takeoff/Landing Procedures

1. Place the aircraft in an open, flat area with the battery level indicators facing towards you.
2. Turn on the remote controller and your mobile device, then turn on the Intelligent Flight Battery.
3. Launch the DJI GO 4 app and tap GO FLY.
4. Wait until the Aircraft Indicators blink green. This means the Home Point is recorded and it is now safe to fly. If they flash yellow, the Home Point has not been recorded.
5. Push the left stick up slowly to take off or use Auto Takeoff.
6. Shoot photos and videos using the DJI GO 4 app.
7. To land, hover over a level surface and gently pull down on the left stick to descend.
8. After landing, execute the CSC command or hold the left stick at its lowest position until the motors stop.
9. Turn off the Intelligent Flight Battery first, then the Remote Controller.

⚠
- When the Aircraft Status Indicators blink yellow rapidly during flight, the aircraft has entered Failsafe mode.
- A low battery level warning is indicated by the Aircraft Status Indicators blinking red slowly or rapidly during flight.
- Watch our video tutorials for more flight information.

Video Suggestions and Tips

1. Go through the full pre-flight checklist before each flight.
2. Select the desired gimbal operation mode in the DJI GO 4 app.
3. Only shoot video when flying in P-mode.
4. Always fly in good weather and avoid flying in rain or heavy wind.
5. Choose the camera settings that suit your needs. Settings include photo format and exposure compensation.
6. Perform flight tests to establish flight routes and preview scenes.
7. Push the control sticks gently to keep the aircraft's movement smooth and stable.

© 2020 DJI All Rights Reserved.

Appendix

 © 2020 DJI All Rights Reserved.

Appendix

Specifications

Aircraft	
Weight (Battery & Propellers Included)	Phantom 4 Pro/Pro+: 1388 g Phantom 4 Pro/Pro+ V2.0: 1375 g
Diagonal Size (Excluding Propellers)	350 mm
Max Ascent Speed	Sport mode: 19.7ft/s(6 m/s); GPS mode: 16.4ft/s(5 m/s)
Max Descent Speed	Sport mode: 13.1ft/s(4 m/s); GPS mode: 9.8ft/s (3 m/s)
Max Speed	45 mph (72 kph) (S-mode); 36mph (58 kph) (A-mode); 31 mph (50 kph) (P-mode)
Max Tilt Angle	42° (Sport mode); 35° (Attitude mode); 25° (GPS mode)
Max Angular Speed	250°/s (Sport mode); 150°/s (Attitude mode)
Max Service Ceiling Above Sea Level	19685 ft (6000 m)
Max Wind Speed Resistance	10 m/s
Max Flight Time	Approx. 30 minutes
Operating Temperature Range	32° to 104° F (0° to 40° C)
Satellite Positioning Systems	GPS/GLONASS
Operating Frequecy	Phantom 4 Pro / Pro+: 2.400 - 2.483 GHz and 5.725 - 5.850 GHz Phantom 4 Pro / Pro+ V2.0: 2.400 - 2.483 GHz and 5.725 - 5.850 GHz
Transmitter Power (EIRP)	Phantom 4 Pro / Pro+: 2.4 GHz: ≤26 dBm (FCC); ≤20 dBm (CE); ≤20 dBm (SRRC) 5.8 GHz: ≤26 dBm (FCC); ≤14 dBm (CE); ≤26 dBm (SRRC) Phantom 4 Pro / Pro+ V2.0: 2.4 GHz: ≤26 dBm (FCC); ≤20 dBm (CE); ≤20 dBm (SRRC) 5.8 GHz: ≤26 dBm (FCC); ≤14 dBm (CE); ≤26 dBm (SRRC)
Hover Accuracy Range	Vertical: ±0.1 m (With Vision Positioning); ±0.5 m (With GPS Positioning) Horizontal: ±0.3 m (With Vision Positioning); ±1.5 m (With GPS Positioning)
Gimbal	
Stabilization	3-axis (pitch, roll, yaw)
Controllable Range	Pitch: - 90° to + 30°
Max Controllable Angular Speed	Pitch: 90°/s
Angular Vibration Range	±0.02°
Vision System	
Velocity Range	≤31 mph (50 kph) at 6.6 ft (2 m) above ground
Altitude Range	0 - 33 feet (0 - 10 m)
Operating Range	0 - 33 feet (0 - 10 m)
Obstacle Sensory Range	2 - 98 ft (0.7 - 30 m)
FOV	Forward/Rear: 60° (horizontal), ±27° (vertical) Downward: 70° (front and rear), 50° (left and right)
Measuring Frequency	Forward/Rear: 10 Hz Downward: 20 Hz
Operating Environment	Surface with clear pattern and adequate lighting (lux > 15)

© 2020 DJI All Rights Reserved.

Infrared Sensing System	
Obstacle Sensory Range	0.6 - 23 ft (0.2 - 7 m)
FOV	70°(Horizontal), ±10°(Vertical)
Measuring Frequency	10 Hz
Operating Environment	Surface with diffuse reflection material, and reflectivity > 8% (such as wall, trees, humans, etc.)
Camera	
Sensor	1'' CMOS; Effective pixels: 20 M
Lens	FOV (Field of View) 84°, 8.8 mm (35 mm format equivalent: 24 mm), f/2.8 - f/11, auto focus at 1 m - ∞
ISO Range	Video: 100 – 3200 (Auto); 100 - 6400 (Manual) Photo:100 - 3200 (Auto);100 - 12800(Manual)
Mechanical Shutter	8 - 1/2000 s
Electronic Shutter	8 - 1/8000 s
Image Size	3:2 Aspect Ratio: 5472×3648 4:3 Aspect Ratio: 4864×3648 16:9 Aspect Ratio: 5472×3078
PIV Image Size	4096×2160 (4096×2160 24/25/30/48/50p) 3840×2160 (3840×2160 24/25/30/48/50/60p) 2720×1530 (2720×1530 24/25/30/48/50/60p) 1920×1080 (1920×1080 24/25/30/48/50/60/120p) 1280×720 (1280×720 24/25/30/48/50/60/120p)
Still Photography Modes	Single shot Burst shooting: 3/5/7/10/14 frames Auto Exposure Bracketing (AEB): 3/5 Bracketed frames at 0.7EV Bias Interval: 2/3/5/7/10/15/20/30/60 s
Video Recording Modes	H.265 • C4K: 4096×2160 24/25/30p @100Mbps • 4K: 3840×2160 24/25/30p @100Mbps • 2.7K: 2720×1530 24/25/30p @65Mbps 2720×1530 48/50/60p @80Mbps • FHD: 1920×1080 24/25/30p @50Mbps 1920×1080 48/50/60p @65Mbps 1920×1080 120p @100Mbps • HD: 1280×720 24/25/30p @25Mbps 1280×720 48/50/60p @35Mbps 1280×720 120p @60Mbps H.264 • C4K: 4096×2160 24/25/30/48/50/60p @100Mbps • 4K: 3840×2160 24/25/30/48/50/60p @100Mbps • 2.7K: 2720×1530 24/25/30p @80Mbps 2720×1530 48/50/60p @100Mbps • FHD: 1920×1080 24/25/30p @60Mbps 1920×1080 48/50/60p @80Mbps 1920×1080 120p @100Mbps • HD: 1280×720 24/25/30p @30Mbps 1280×720 48/50/60p @45Mbps 1280×720 120p @80Mbps

 © 2020 DJI All Rights Reserved.

Max. Bitrate Of Video	100 Mbps
Supported File Systems	FAT32 (≤ 32 GB); exFAT (> 32 GB)
Photo	JPEG, DNG (RAW), JPEG + DNG
Video	MP4/MOV (AVC/H.264; HEVC/H.265)
Supported SD Cards	Micro SD, Max Capacity: 128GB. Write speed ≥15MB/s, class 10 or UHS-1 rating required
Operating Temperature Range	32° to 104° F (0° to 40° C)
Remote Controller	
Operating Frequency	Phantom 4 Pro / Pro+: 2.400 - 2.483 GHz and 5.725 - 5.825 GHz Phantom 4 Pro / Pro+ V2.0: 2.400 - 2.483 GHz and 5.725 - 5.850 GHz
Max Transmission Distance (Unobstructed, free of interference)	Phantom 4 Pro / Pro+: 2.4 GHz: 4.3 mi (7 km, FCC); 2.2 mi (3.5 km, CE); 2.5 mi (4 km, SRRC) 5.8 GHz: 4.3 mi (7 km, FCC); 1.2 mi (2 km, CE); 3.1 mi (5 km,SRRC) Phantom 4 Pro / Pro+ V2.0: 2.4 GHz: 5 mi (8 km, FCC); 3.1 mi (5 km, CE); 3.1 mi (5 km, SRRC) 5.8 GHz: 5 mi (8 km, FCC); 3.1 mi (5 km, CE); 3.1 mi (5 km,SRRC)
Operating Temperature	32° to 104° F (0° to 40° C)
Battery	6000 mAh LiPo 2S
Transmitter Power (EIRP)	Phantom 4 Pro / Pro+: 2.4 GHz: ≤26 dBm (FCC); ≤17 dBm (CE); ≤20 dBm (SRRC) 5.8 GHz: ≤28 dBm (FCC); ≤14 dBm (CE); ≤20 dBm (SRRC) Phantom 4 Pro / Pro+ V2.0: 2.4 GHz: ≤26 dBm (FCC); ≤20 dBm (CE); ≤20 dBm (SRRC) 5.8 GHz: ≤26 dBm (FCC); ≤14 dBm (CE); ≤20 dBm (SRRC)
Operating Current/Voltage	1.2 A @7.4 V
Video Output Port	GL300E/GL300K: HDMI GL300F/GL300L: USB
Mobile Device Holder	GL300E/GL300K: Built-in Display device (5.5 inch screen, 1920×1080, 1000 cd/m^2, Android system, 4G RAM+16G ROM) GL300F/GL300L: Tablets and smartphones
Charger*	
Voltage	17.5 V
Rated Power	100 W
Intelligent Flight Battery* (PH4-5870mAh-15.2V)	
Capacity	5870 mAh
Voltage	15.2 V
Battery Type	LiPo 4S
Energy	89.2 Wh
Net Weight	468 g
Charging Temperature Range	41° to 104° F (5° to 40° C)
Max. Charging Power	100 W

* Intelligent Flight Batteries and Chargers for Phantom 4 series can be used interchangeably.

© 2020 DJI All Rights Reserved.

Upgrading the Firmware

Use the DJI GO 4 app or DJI Assistant 2 to update the firmware of the aircraft and remote controller.

Phantom 4 Pro/Pro+

Phantom 4 Pro/Pro+ does not support updating the aircraft and the remote controller simultaneously. Please follow the update process below.

Updating the Aircraft Firmware

Method 1: Using DJI GO 4

1. Ensure both the aircraft and the remote controller are powered on and connected.
2. For the Phantom 4 Pro, connect the Micro USB port of the aircraft to the mobile device with the USB OTG cable.

For Phantom 4 Pro+, connect the Micro USB port of the aircraft and the remote controller with the USB OTG cable.

3. Follow the on-screen instructions in DJI GO 4 to update. Ensure the internet is available during the update.
4. Restart the aircraft after the firmware update is complete.

Method 2: Using DJI Assistant 2

1. Power on the aircraft and connect it to a computer with a USB cable.
2. Launch DJI Assistant 2 and login with a DJI account.
3. Select your product icon and click “Firmware Update” on the left.
4. Select the required firmware version.
5. DJI Assistant 2 will download and update the firmware automatically.
6. Restart the aircraft after the firmware update is complete.

Updating the Remote Controller Firmware

Method 1: Using DJI GO 4

Connect the remote controller and DJI GO 4, where you will be reminded if a new firmware update is available. To start updating, connect your mobile device to the internet and follow the on-screen instructions.

Method 2: Using a microSD Card (only for the GL300E remote controller)

1. Visit the official DJI website and go to the Phantom 4 Pro/Pro+ page to download the latest firmware to a microSD card.
2. Insert the microSD card into the microSD card slot of the remote controller.
3. Power on the remote controller, enter System Settings > System Update, and click Local Update on the top-right corner. The latest firmware will show on the microSD card. Click Update to start updating.

Phantom 4 Pro/Pro+ V2.0

When the aircraft and the remote controller are connected, you can update both of them simultaneously through the following methods.

 © 2020 DJI All Rights Reserved.

Method 1: Using DJI GO 4

Connect the remote controller and DJI GO 4, where you will be reminded if a new firmware update is available. To start updating, connect your mobile device to the internet and follow the on-screen instructions.

Method 2: Using DJI Assistant 2

When the aircraft and the remote controller are connected, you can update both of them simultaneously with DJI Assistant 2 (only for Phantom 4 Pro V2.0, where separate updating is also supported). Follow the instructions below to update the firmware through DJI Assistant 2:

1. With the remote controller and the aircraft powered off, use a Micro USB cable to connect the remote controller to the computer through the USB port.
2. Power on the remote controller and aircraft.
3. Launch DJI Assistant 2 and log in with your DJI account.
4. Select your product icon and click on “Firmware Update” on the left.
5. Select the required firmware version.
6. Wait for the firmware to be downloaded and the firmware update will start automatically.
7. Restart the aircraft and the remote controller after the firmware update is complete.

Method 3: Using a microSD Card (only for the GL300K remote controller)

1. Visit the official DJI website and go to the Phantom 4 Pro/Pro+ page to download the latest firmware to a microSD card.
2. Insert the microSD card into the microSD card slot of the remote controller.
3. Power on the remote controller, enter System Settings > System Update, and click Local Update on the top-right corner. The latest firmware will show on the microSD card. Click Update to start updating.

- The firmware update will take around 15 minutes. It is normal that the gimbal will go limp, the aircraft status indicator blinks abnormally and the aircraft reboots. Wait patiently until the update is complete.
- Ensure the computer has access to the Internet.
- Ensure the battery level is adequate for the Intelligent Flight Battery and the remote controller.
- Do not disconnect the aircraft from the computer during firmware upgrade.

Intelligent Flight Mode

Intelligent Flight mode includes Course Lock, Home Lock, Point of Interest (POI), Follow Me and Waypoints features to assist users to capture professional shoots during the flight. Course Lock and Home Point lock ensure the lock of aircraft orientation, sparing the user to focus more on other operations. Point of Interest, Follow Me and Waypoints mode enable aircraft to fly automatically according to the pre-set flight maneuvers.

Course Lock	Lock the current nose direction as the aircraft’s forward direction. The aircraft will move in the locked directions regardless of its orientation (yaw angle).
Home Lock	Pull the pitch stick backward to move the aircraft toward its recorded Home Point.
Point of Interest	The aircraft will orbit around the subject automatically to allow the operator to be more focus on framing their shoot on the subject in Point of Interest.

© 2020 DJI All Rights Reserved.

Follow Me	A virtual tether is created between the aircraft and the mobile device so that the aircraft can track your movement as you move. Note that Follow Me performance is subject to the GPS accuracy on the mobile device.
Waypoints	Record a flight path, then the aircraft will fly along the same path repeatedly while you control the camera and orientation. The flight path can be saved and re-apply in the future.

After-Sales Information

Visit the following pages to learn more about After-sales policy and warranty information:

1. After-sales Policy: http://www.dji.com/service
2. Refund Policy: http://www.dji.com/service/refund-return
3. Paid Repair Service: http://www.dji.com/service/repair-service
4. Warranty Service: http://www.dji.com/service/warranty-service

HDMI™
HIGH-DEFINITION MULTIMEDIA INTERFACE

DJI incorporates HDMI™ technology.
The terms HDMI and HDMI High-Definition Multimedia Interface, and the HDMI Logo are trademarks or registered trademarks of HDMI Licensing LLC in the United States and other countries.

 © 2020 DJI All Rights Reserved.

DJI Support
http://www.dji.com/support

This content is subject to change.

Download the latest version from
http://www.dji.com/product/phantom-4-pro

If you have any questions about this document, please contact DJI by sending a message to **DocSupport@dji.com**.

PHANTOM is a trademark of DJI.
Copyright © 2020 DJI All Rights Reserved.