Canon

PUB. DIE-0525-000

XA40
XA45

4K Camcorder

Instruction Manual

COPYRIGHT WARNING
Unauthorized recording of copyrighted materials may infringe on the rights of copyright owners and be contrary to copyright laws.

Trademark Acknowledgements

- SD, SDHC and SDXC Logos are trademarks of SD-3C, LLC.
- Microsoft and Windows are trademarks or registered trademarks of Microsoft Corporation in the United States and/or other countries.
- macOS is a trademark of Apple Inc., registered in the U.S. and other countries.
- HDMI, the HDMI logo and High-Definition Multimedia Interface are trademarks or registered trademarks of HDMI Licensing Administrator, Inc. in the United States and other countries.
- Other names and products not mentioned above may be trademarks or registered trademarks of their respective companies.
- This device incorporates exFAT technology licensed from Microsoft.
- "Full HD 1080" refers to Canon camcorders compliant with high-definition video composed of 1,080 vertical pixels (scanning lines).

FULL HD
1080

- This product is licensed under AT&T patents for the MPEG-4 standard and may be used for encoding MPEG-4 compliant video and/or decoding MPEG-4 compliant video that was encoded only (1) for a personal and non-commercial purpose or (2) by a video provider licensed under the AT&T patents to provide MPEG-4 compliant video. No license is granted or implied for any other use for MPEG-4 standard.

Highlights of the Camcorder

The Canon XA45 / XA40 4K Camcorder is a high-performance camcorder whose compact size makes it ideal in a variety of situations. The following are just some of the many functions featured in the camcorder.

4K Recording

CMOS sensor and DIGIC DV 6 image processor

The camcorder is equipped with a 1/2.3-inch CMOS sensor that captures video at an effective pixel count of approximately 8.29 megapixels (3840x2160). The video is then processed by the DIGIC DV 6 image processor. In addition to recording 4K video, the camcorder employs oversampling to record Full HD video.

Wide zoom lens and 8-bladed aperture

The zoom lens is equipped with 20x optical zoom and has a focal length at full wide angle of 29.3 mm* (35 mm equivalent), making the camcorder versatile in a variety of shooting situations. The 8-bladed aperture delivers a pleasing out-of-focus blur (“bokeh”) to your recordings.

* When the resolution is 3840x2160 and the image stabilization is a setting other than Dynamic IS. The focal length is 30.6 mm when using Dynamic IS.

4K recording at 29.97P and HD recording at 59.94P

The camcorder can record clips in MP4 format at 3840x2160 with a frame rate of 29.97P or 1920x1080 with a frame rate of 59.94P, giving you the freedom to choose the video configuration that is most suitable for your project. Furthermore, audio is recorded as either 4-channel linear PCM or 2-channel AAC.

Convenience and Functionality

Recording for extended periods

With its two SD card slots, the camcorder allows you to use dual recording (📖 32) to record the same clip on two SD cards, or relay recording to automatically switch to the other SD card when the one being used becomes full. Dual recording is a convenient way to create a backup of your recordings while relay recording effectively extends the available recording time.

Emphasis on versatility

This camcorder has features to make it usable as a main camera but is also small enough to be very portable. The advanced image stabilization (📖 63), which stabilizes the image along 5 axes, will let you shoot in a variety of situations in the field. The handle unit is removable so you can attach it to enjoy additional audio options and infrared functionality, or remove it when you need improved portability. The LCD touch panel and viewfinder can be angled in a variety of positions, allowing for shooting in tight places, for example.

Manual controls at your fingertips

The focus/zoom ring helps you achieve the focus you are looking for. You can easily change the ring's functionality so that you can operate the zoom. You can also assign certain frequently used functions to a customizable button and adjust those functions with the accompanying dial (📖 84). Additionally, the camcorder also features 5 assignable buttons on the camcorder and one onscreen assignable touch button to which you can assign a variety of functions to access them with ease (📖 85).

Face detection & tracking (📖 61)

After detecting a subject's face, the camcorder can focus on it and even track it. Furthermore, the camcorder can be in manual focus but switch to autofocus when a face is detected, ensuring that important subjects are in focus.

Infrared recording

Record in darkness using infrared recording (📖 80). With the built-in infrared light on the handle unit, you can record nocturnal animals in their natural environment or other such scenes.

Creativity and Artistic Expression

Special recording modes (📖 38, 78)

When you make recordings, you can change the recording frame rate to achieve a fast or slow motion effect. Alternatively, you can use pre-recording to record 3 seconds before you decide to start recording, helping you capture those hard-to-catch opportunities.

Looks (📖 51)

You can adjust various aspects of the picture, such as the color depth, sharpness and brightness, to create a desired “look”.

Enhanced audio features (📖 68)

The attachable handle unit offers expanded audio options. It features two INPUT terminals for external microphones (balanced input), manual control over the audio recording level, and control for supplying phantom power to an external microphone

Other Features

- Battery packs compatible with Intelligent System give you an estimate (in minutes) of the remaining recording time.
- Compatibility with the optional GP-E2 GPS Receiver to geotag your recordings (📖 82).
- Compatibility with the optional RC-V100 Remote Controller (📖 81) when you need a professional level of remote control.

Table of contents

1 Introduction 7

About this Manual 7
Conventions Used in this Manual 7
Supplied Accessories 9
Names of Parts 10

2 Preparations 15

Attaching the Ferrite Core 15
Charging the Battery Pack 15
Preparing the Camcorder 18
Attaching the Microphone Holder Unit 18
Attaching the Handle Unit 18
Using the Lens Hood 19
Adjusting the LCD Screen 19
Using the Viewfinder 20
Grip Belt and Straps 21
Basic Operation of the Camcorder 23
Turning the Camcorder On and Off 23
Setting the Camera Mode 24
Using the MENU Button and Joystick 24
First Time Settings 25
Setting the Date and Time 25
Changing the Language 26
Changing the Time Zone 26
Using the Menus 27
Setup Menus 27
FUNC Menu 28
Using SD Cards 30
Compatible SD Cards 30
Inserting and Removing an SD Card 31
Initializing an SD Card 32
Selecting the SD Card for Recordings 32
Dual Recording and Relay Recording 32
Recovering Clips 33

3 Recording 34

Recording Clips and Photos 34
Basic Recording 34
Reviewing the Latest Clip Recorded 36
Video Configuration: Resolution, Bit Rate and Frame Rate 37
Selecting the Resolution and Bit Rate 37
Selecting the Frame Rate 37
Slow & Fast Motion Recording 38
Shooting Modes 39
Special Scene Modes 40
Exposure Adjustment 42
Manual Exposure (**M**) 42
Automatic Exposure 43
Touch Exposure 44
Exposure Lock (AE Lock) 45
Exposure Compensation 45
ND Filter 46
Using the Zebra Pattern 46
Backlight Correction 47
Automatic Gain Control (AGC) Limit 48
White Balance 49
Using Looks 51
Zooming 52
Using the Focus/Zoom Ring 52
Using the Zoom Rockers 53
Using the Touch Screen's Zoom Controls 55
Using an Optional Remote Controller 55
Soft Zoom Control 55
Digital Tele-Converter 56
Focus Adjustment 57
Manual Focus 57
Autofocus 60
Face Detection & Tracking 61
Image Stabilization 63
Dynamic IS or Standard IS 63
Setting the Time Code 64
Selecting the Time Code Mode 64
Selecting Drop Frame or Non-Drop Frame 66
Setting the User Bit 67
Recording Audio 68
Selecting the Audio Recording Format 68
Audio Settings and Recorded Audio Channels 69
Connecting an External Microphone or External Audio Input Source to the Camcorder 70

Using Line Input or an External Microphone Connected to an INPUT Terminal 71
Audio Recording Level (INPUT Terminals) 72
Adjusting the Microphone's Sensitivity (INPUT terminals) 72
Microphone Attenuator (INPUT terminals) 73
Using the Built-in Microphone or an External Microphone Connected to the MIC Terminal 73
Audio Recording Level (Built-in Microphone/MIC Terminal) 74
Microphone Sensitivity (Built-in Microphone) 74
Microphone Attenuator (Built-in Microphone or MIC Terminal) 75
Low-Cut Filter (Built-in Microphone or MIC Terminal) 75
Using Headphones 76
Color Bars/Audio Reference Signal 77
Recording Color Bars 77
Recording an Audio Reference Signal 77
Pre-Recording 78
Onscreen Displays 79
Infrared Recording 80
Using the Optional RC-V100 Remote Controller 81
Using the GP-E2 GPS Receiver 82
Connecting the GPS Receiver 82

4 Customization 84

CUSTOM Dial and Button 84
Assignable Buttons 85
Saving and Loading Menu Settings 87
Saving Camcorder Settings 87
Loading Camcorder Settings 87

5 Playback 88

Basic Playback 88
Playback Controls 90
Adjusting the Volume 91
Displaying Clip Information 91
Clip and Photo Operations 92
Deleting Clips and Photos 92
Trimming Clips 93

6 External Connections 94

Video Output Configuration 94
Connecting to an External Monitor 96
Connection Diagram 96
XA45 Selecting the Terminal Used For Output 96
XA45 Using the SDI OUT Terminal 97
Using the HDMI OUT Terminal 97
Audio Output 99
Selecting the Audio Channels for Headphone or Speaker Output 99
Selecting the Audio Channels for HDMI Output 99

7 Saving Clips 100

Working with Clips on a Computer 100
Copying Clips and Photos Between SD Cards 101

8 Additional Information 102

Menu Options 102
FUNC Menu 102
Setup Menus 103
Appendix: Onscreen Icons and Displays 112
Troubleshooting 116
List of Messages 120
Safety Instructions and Handling Precautions 122
Camcorder 123
Battery Pack 124
SD Card 124
Built-in Rechargeable Lithium Battery 125
Disposal 125
Maintenance/Others 126
Cleaning 126
Condensation 126
Viewing the Certification Logo 126
Using the Camcorder Abroad 127
Optional Accessories 128
Specifications 131
Reference Tables 134
Approximate recording times 134
Charging, Recording and Playback Times 134
Index 136

1 Introduction

About this Manual

Thank you for purchasing the Canon XA45 / XA40. Please read this manual carefully before you use the camcorder and retain it for future reference. Should your camcorder fail to operate correctly, refer to *Troubleshooting* (📖 116).

Conventions Used in this Manual

- ❗ IMPORTANT: Precautions related to the camcorder's operation.
- ⓘ NOTES: Additional topics that complement the basic operating procedures.
- 📖: Reference page number within this manual.
- **XA45**: Used as an abbreviation for the model indicated in the icon. The icon refers to text and illustrations that apply only to the indicated model.
- The following terms are used in this manual:
  "SD card" refers to an SD, SDHC or SDXC memory card.
  "Screen" refers to the LCD screen and the viewfinder screen.
  "Clip" refers to one movie unit from the point you press the START/STOP button to start recording until you press again to pause the recording.
- The photos included in this manual are simulated pictures taken with a still camera. Unless indicated otherwise, illustrations and menu icons refer to the **XA45**.
- Some screenshots in this manual have been simplified to show only relevant icons.

❗ IMPORTANT

- Observe the following precautions while the ACCESS indicator is on or flashing. Failing to do so may result in permanent data loss or damage to the memory.
  - Do not disconnect the power source or turn off the camcorder.
  - Do not open the SD card compartment cover.
  - Do not change the camcorder's camera mode.
  - Do not set the camcorder to MEDIA mode.
  - When a USB cable is connected to the camcorder, do not disconnect the USB cable.

These icons indicate the camcorder's operating mode and whether a function is available in that mode.

CAMERA MEDIA: Indicates whether the camcorder is in shooting (CAMERA) or playback (MEDIA) mode. In this example, the function is available only in CAMERA mode. For details, refer to *Turning the Camcorder On and Off* (📖 23).

AUTO M: Indicates the camera mode. For details, refer to *Setting the Camera Mode* (📖 24).

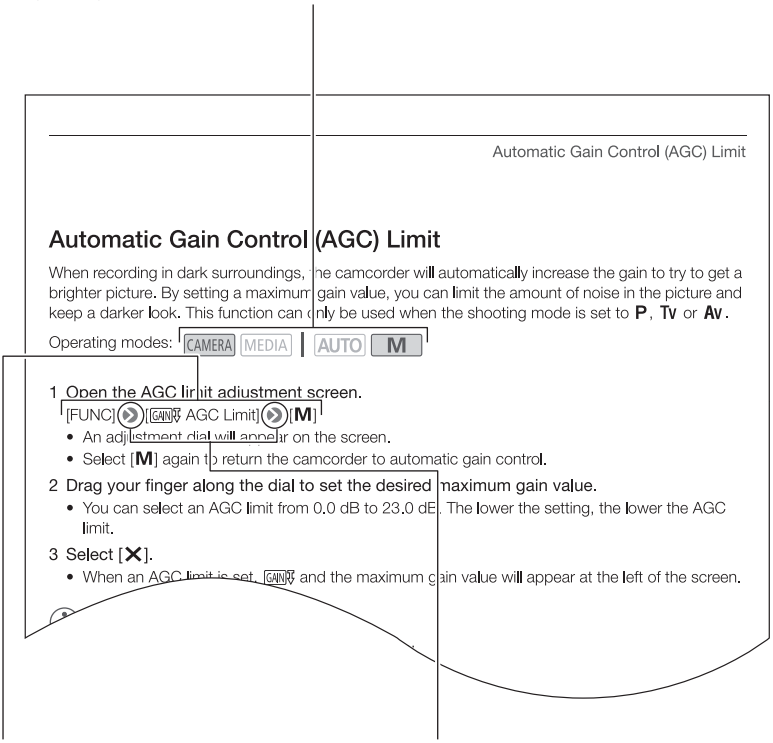
Automatic Gain Control (AGC) Limit

Automatic Gain Control (AGC) Limit

When recording in dark surroundings, the camcorder will automatically increase the gain to try to get a brighter picture. By setting a maximum gain value, you can limit the amount of noise in the picture and keep a darker look. This function can only be used when the shooting mode is set to **P**, **Tv** or **Av**.

Operating modes: CAMERA MEDIA | AUTO M

1 Open the AGC limit adjustment screen.
[FUNC] ➤ [GAIN AGC Limit] ➤ [M]
- An adjustment dial will appear on the screen.
- Select [M] again to return the camcorder to automatic gain control.

2 Drag your finger along the dial to set the desired maximum gain value.
- You can select an AGC limit from 0.0 dB to 23.0 dB. The lower the setting, the lower the AGC limit.

3 Select [✕].
- When an AGC limit is set, GAIN and the maximum gain value will appear at the left of the screen.

Brackets [ ] are used to refer to onscreen buttons and menu options you will select and to other onscreen messages and displays.

The ➤ arrow is used to abbreviate menu selections. For details on how to use the menus, refer to *Using the Menus* (📖 27). For a summary of available menu options and settings, refer to the appendix *Menu Options* (📖 102).

Supplied Accessories

The following accessories are supplied with the camcorder:

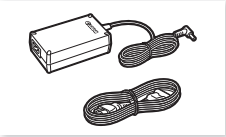

CA-570 Compact Power Adapter (incl. power cord)

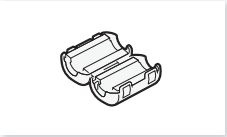

Ferrite core

BP-820 Battery Pack

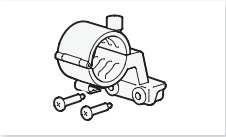

Microphone holder unit (incl. screws)

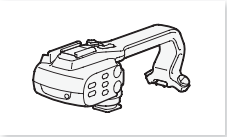

Handle unit (incl. screws)

Lens hood with lens barrier

Lens cap

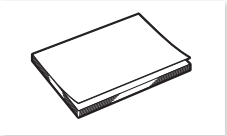

Quick Guide

Names of Parts

Left side view

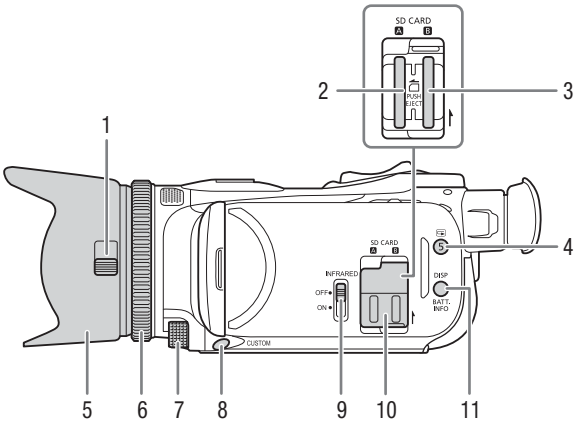

1 Lens barrier switch (📖 34)
2 SD card slot A (📖 30)
3 SD card slot B (📖 30)
4 (review recording) button (📖 36)/ Assignable button 5 (📖 85)
5 Lens hood (📖 19)
6 Focus/Zoom ring (📖 52, 57)
7 CUSTOM (customizable) dial (📖 84)
8 CUSTOM (customizable) button (📖 84)
9 INFRARED switch (📖 80)
10 SD card compartment cover
11 DISP (onscreen display) button (📖 79)/BATT. INFO (battery information) button (📖 17)

Right side view

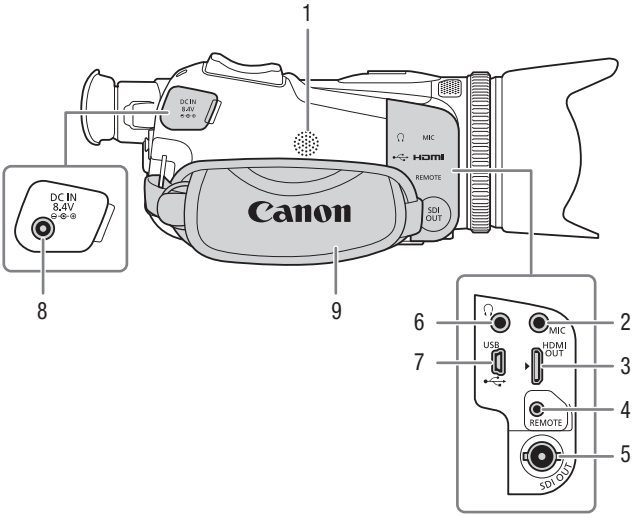

1 Built-in speaker (📖 91)
2 MIC terminal (📖 68)
3 HDMI OUT terminal (📖 96, 97)
4 REMOTE terminal (📖 81)
For connecting commercially available remote controllers.
5 **XA45** SDI OUT terminal (📖 97)
6 🎧 (headphones) terminal (📖 76)
7 USB terminal (📖 82)
8 DC IN terminal (📖 15)
9 Grip belt (📖 21)

Front view

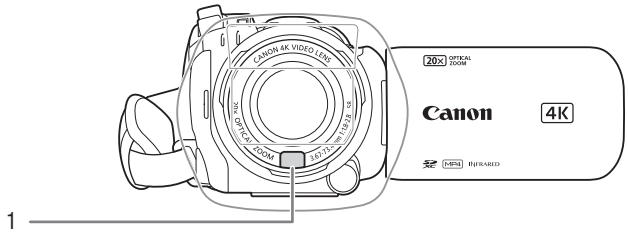

Back view

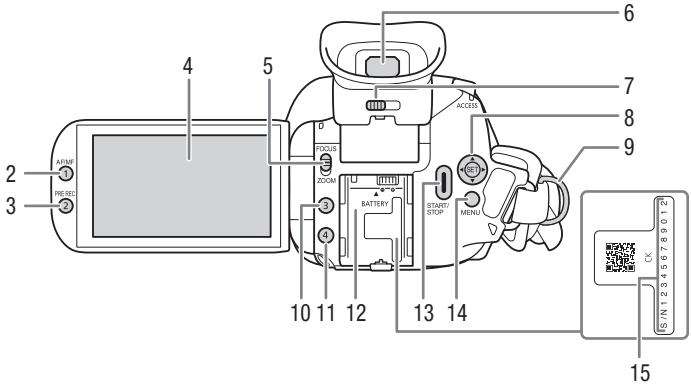

1 Instant AF sensor (📖 60, 126)
2 AF/MF button (📖 57)/ Assignable button 1 (📖 85)
3 PRE REC (pre-recording) button (📖 78)/ Assignable button 2 (📖 85)
4 LCD touch screen (📖 19)
5 Focus/Zoom ring switch (📖 52, 57)
6 Viewfinder (📖 20)
7 Dioptric adjustment lever (📖 20)
8 Joystick/SET button (📖 24)
9 Strap mount (📖 21)
10 Assignable button 3 (📖 85)
11 Assignable button 4 (📖 85)
12 Battery attachment unit (📖 15)
13 START/STOP button (📖 34)
14 MENU button (📖 27)
15 Serial number

Top view

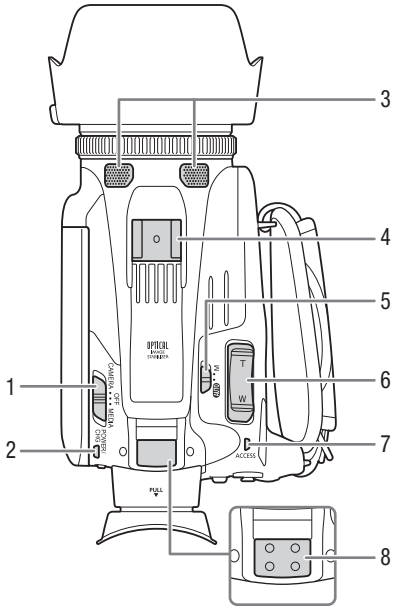

Bottom view

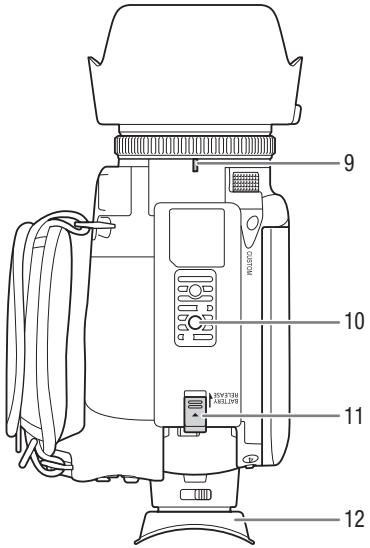

1 Power switch (📖 23)
2 POWER / CHG (battery charging) indicator (📖 15)
3 Built-in stereo microphone (📖 68)
4 Accessory shoe
5 Camera mode switch (📖 24)
6 Grip zoom rocker (📖 53)
7 ACCESS indicator (📖 34)
8 Handle unit mount (📖 18)
9 Lens hood mount index mark
10 Tripod socket
For mounting the camcorder on a tripod with a mounting screw 6.5 mm (0.26 in.) or shorter.
11 BATTERY RELEASE switch (📖 16)
12 Eye cup (📖 20)

Handle unit

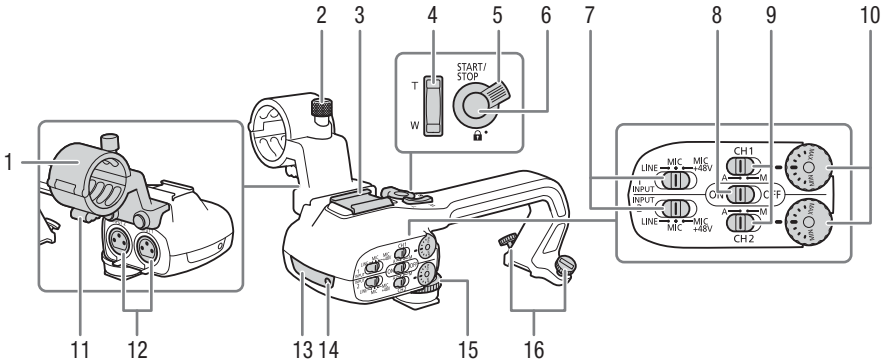

1 Microphone holder unit (📖 68)
2 Microphone lock screw (📖 68)
3 Accessory shoe
4 Handle zoom rocker (📖 53)
5 START/STOP lock (🔒) lever (📖 35)
6 START/STOP button (📖 34)
7 Sensitivity selection switches for INPUT 1 and INPUT 2 (📖 71)
8 INPUT terminal ON/OFF switch (📖 73)
9 Audio level switches for CH1 and CH2 (📖 72)
10 Audio level dials for CH1 and CH2 (📖 72)
11 Microphone cable clamp (📖 70)
12 INPUT 1 and INPUT 2 terminals (collectively referred to as "INPUT terminals") (📖 71)
13 Infrared light (📖 80)
14 Tally lamp (📖 34)
15 Handle unit front screw (📖 18)
16 Handle unit rear screws (📖 18)

Attaching the Ferrite Core

Attach the enclosed ferrite core before you connect the compact power adapter to the camcorder. Attaching the ferrite core to the compact power adapter cable is necessary to suppress RF interference.

Attach the ferrite core to the cable about 6 cm (2.4 in.) from the DC plug (the plug to be connected to the DC IN terminal).

Pass the cable through the center of the core and wrap it around the core (as shown in the illustration), then close the unit until it clicks shut.

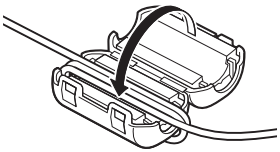

Charging the Battery Pack

The camcorder can be powered with a battery pack or directly using the supplied CA-570 Compact Power Adapter.

1 **Connect the compact power adapter to the camcorder and plug the power cord into a power outlet.**

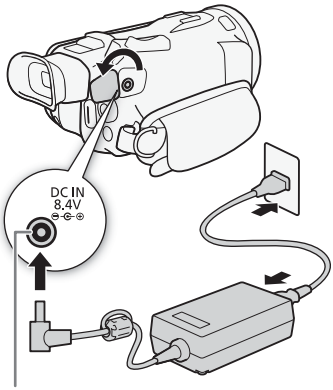

DC IN terminal

2 **Attach the battery pack to the camcorder.**

- Press the battery pack softly into the battery attachment unit and slide it forward until it clicks in place.

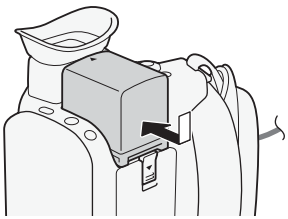

3 Charging will start when the camcorder is turned off.
- If the camcorder was on, the green POWER/CHG indicator will go out when you turn off the camcorder. After a moment, the POWER/CHG indicator will turn on in red (battery pack charging). The red POWER/CHG indicator will go out when the battery pack is fully charged.
- If the indicator flashes, refer to *Troubleshooting* (📖 118).

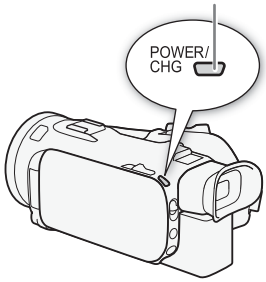

To remove the battery pack

1 Slide the BATTERY RELEASE switch in the direction of the arrow and hold it pressed down (①).

2 Slide the battery pack and then pull it out (②).

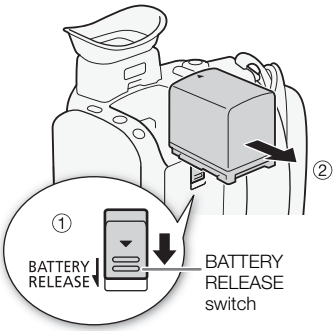

IMPORTANT

- Turn off the camcorder before connecting or disconnecting the compact power adapter. After you turn off the camcorder, important data is updated on the SD card. Be sure to wait until the green POWER/CHG indicator goes out.
- When using the compact power adapter, do not fix it permanently to one place as this may cause a malfunction.
- Do not connect to the camcorder's DC IN terminal or to the compact power adapter any electrical equipment that is not expressly recommended for use with this camcorder.
- To prevent equipment breakdowns and excessive heating, do not connect the supplied compact power adapter to voltage converters for overseas travels or special power sources such as those on aircraft and ships, DC-AC inverters, etc.

NOTES

- We recommend charging the battery pack in temperatures between 10 °C and 30 °C (50 °F and 86 °F). If either the ambient temperature or the battery pack's temperature is outside the range of approx. 0 °C to 40 °C (32 °F to 104 °F), charging will not start.
- The battery pack will be charged only when the camcorder is off.
- If the power supply was disconnected while charging a battery pack, make sure the POWER/CHG indicator has gone out before restoring the power supply.

- If remaining battery time is an issue, you can power the camcorder using the compact power adapter so the battery pack will not be consumed.
- Charged battery packs continue to discharge naturally. Therefore, charge them on the day of use, or the day before, to ensure a full charge.
- The first time you use a battery pack, fully charge it and then use the camcorder until the battery pack is completely depleted. Doing so will ensure that the remaining recording time will be displayed accurately.
- We recommend that you prepare battery packs to last 2 to 3 times longer than you think you might need.
- For handling precautions regarding the battery pack, refer to *Safety Instructions and Handling Precautions* (📖 122).
- For charging times and approximate usage times, refer to *Reference Tables* (📖 134).

Checking the Remaining Battery Charge

With the camcorder turned off, press the BATT. INFO button to display for about 5 seconds a screen showing the approximate battery charge level. Note that if the battery charge is too low, the battery information screen may not appear.

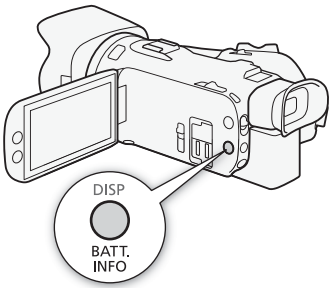

Preparing the Camcorder

This section covers the basic preparations for the camcorder such as attaching the handle unit and lens hood, and adjusting the viewfinder and LCD screen.

IMPORTANT

- Be careful not to drop the camcorder when attaching, removing or adjusting the various accessories. Using a table or other stable surface is recommended.

Attaching the Microphone Holder Unit

Use the supplied screws to attach the microphone holder unit to the handle unit.

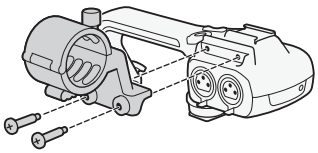

Attaching the Handle Unit

1 Slide the front of the handle unit into the accessory shoe, as shown in the illustration. Then, slide the handle unit forward all the way.
   - Make sure the front and rear screws are raised when you slide the handle unit.

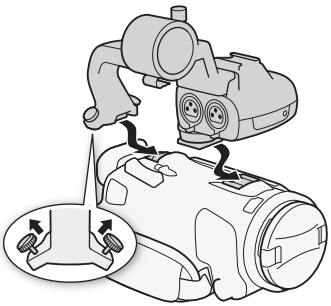

2 Turn the front screw and two rear screws to secure the handle unit.

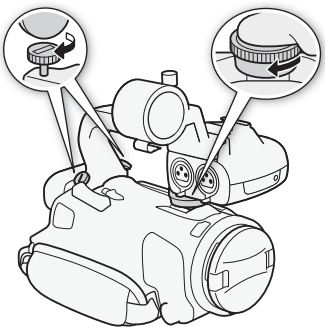

NOTES

- The camcorder is functional even if you remove the handle unit. However, some audio options (68), the infrared light (80) and tally lamp will not be available.

Using the Lens Hood

While recording, the supplied lens hood with lens barrier is effective for reducing stray light that can be the cause of lens flare and ghost images. Additionally, closing the lens barrier can help prevent fingerprints and dirt accumulation on the lens.

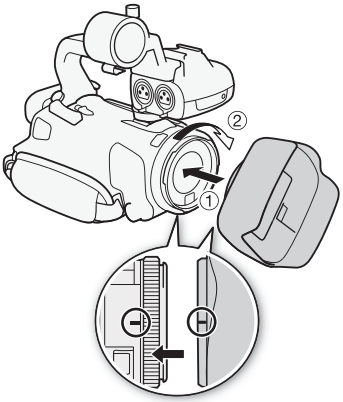

1 Remove the lens cap.

2 Align the mark on the lens hood with the lens hood mount index mark on the bottom of the camcorder (①), and then turn the lens hood clockwise until it stops with a click (②).
- Be careful not to deform the lens hood.
- Make sure that the lens hood is aligned with the thread.
- To remove the lens hood, turn it counterclockwise.

NOTES

About the lens cap:
- Use the supplied lens cap when carrying the camcorder or storing it after use.
- Note that the lens cap and the lens hood with lens barrier cannot be used simultaneously.

Adjusting the LCD Screen

Open the LCD panel 90 degrees.
- You can rotate the panel downward or toward the lens.
- Rotating the LCD toward the lens can be useful to allow the subject to monitor the LCD screen while you use the viewfinder.

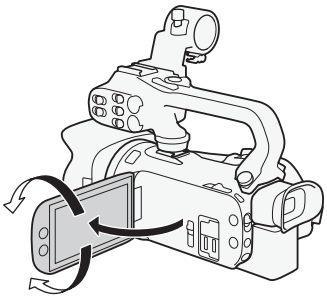

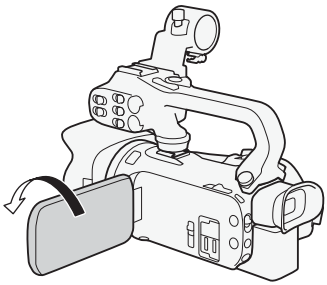

Subject can monitor the LCD screen

NOTES
- You can adjust the brightness of the LCD screen with the **MENU** ➤ [Display Setup] ➤ [LCD Brightness] or [LCD Backlight] setting. Also, you can hold the DISP button pressed down for more than 2 seconds to change the [LCD Backlight] setting between bright and normal or from dim to normal.

- Adjusting the brightness does not affect the brightness of recordings.
- Using a brighter setting will shorten the effective usage time of the battery pack.
- When the LCD panel is turned 180 degrees toward the subject, you can use the **MENU** ➤ [Display Setup] ➤ [LCD Mirror Image] setting to reverse the screen's image horizontally, showing a mirror image of the subject.
- For details about how to take care of the LCD screen, refer to *Handling Precautions* (123), *Cleaning* (126).
- **About the LCD and viewfinder screens:** The screens are produced using extremely high-precision manufacturing techniques, with more than 99.99% of the pixels operating to specification. Very rarely, pixels may misfire or may light up permanently as white dots. This has no effect on the recorded image and does not constitute a malfunction.

Using the Viewfinder

If it is difficult to use the LCD screen, you can use the viewfinder, which can be tilted 45 degrees upward.

1 Use the power switch to turn on the camcorder. (23).
2 Close the LCD panel (①).
3 Pull out the viewfinder and adjust the viewing angle (②).
4 Adjust the viewfinder using the dioptric adjustment lever (③).

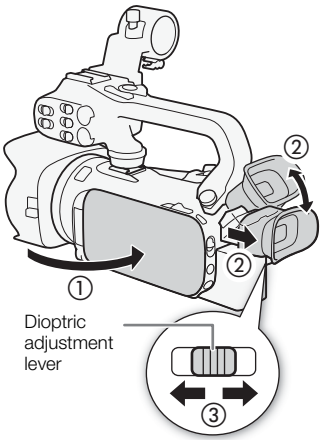

NOTES

- You can adjust the brightness of the viewfinder with the **MENU** ➤ [Display Setup] ➤ [Viewfinder Backlight] setting.
- Adjusting the brightness does not affect the brightness of recordings.
- Using a brighter setting will shorten the effective usage time of the battery pack.
- You cannot use the LCD screen and viewfinder simultaneously.

- Make sure you keep the eye cup attached when using the camcorder.
  If you wear glasses, you may find the viewfinder easier to use if you flip back the outer edge of the eye cup toward the camcorder body.
- For details about how to take care of the viewfinder, refer to *Handling Precautions* (📖 123), *Cleaning* (📖 126).

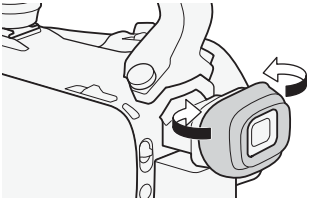

Grip Belt and Straps

Fasten the grip belt.

- Adjust the grip belt so that you can reach the grip zoom rocker with your index finger, and the START/STOP button with your thumb.

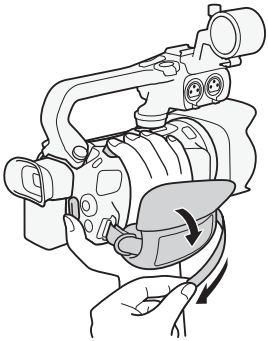

Attaching an optional wrist strap

Attach the wrist strap to the strap mount on the grip belt, adjust the length and fasten.

- You can use both for extra convenience and protection.

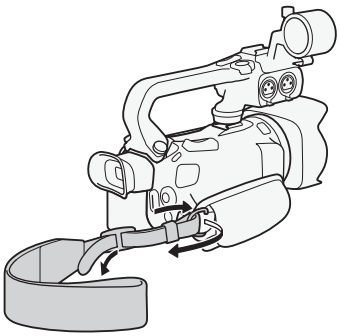

Attaching an optional shoulder strap

Pass the ends of the shoulder strap through the strap mount on the grip belt and adjust the length of the strap.

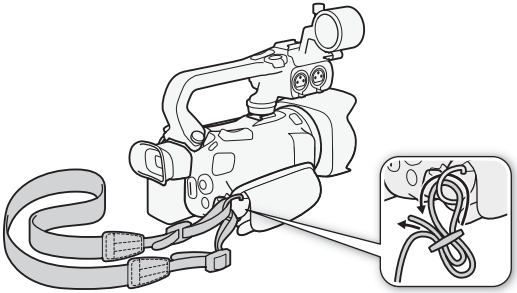

Basic Operation of the Camcorder

Turning the Camcorder On and Off

You can choose to turn the camcorder on in CAMERA (CAMERA) mode for making recordings or MEDIA (MEDIA) mode for playing back recordings. Select the mode using the power switch.

To turn on the camcorder

Set the power switch to CAMERA for CAMERA mode (📖 34) or MEDIA for MEDIA mode (📖 88).

- The POWER/CHG indicator will illuminate in green.

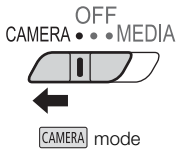

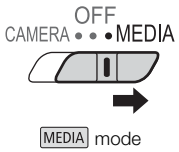

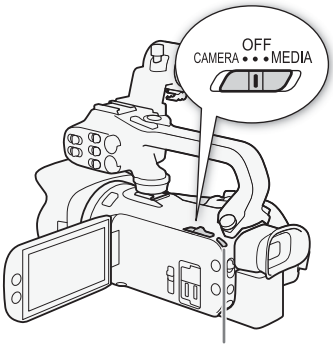

To turn off the camcorder

Set the power switch to OFF.

- The POWER/CHG indicator will go out.

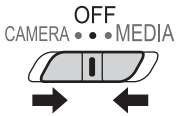

NOTES

- You can use the **MENU** ➤ [System Setup] ➤ [POWER LED] setting to prevent the POWER indicator from illuminating.

Setting the Camera Mode

When making recordings, you can change the camera mode to match your shooting style.

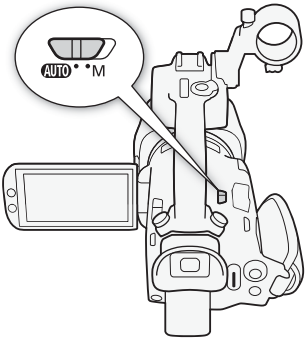

AUTO (Auto) mode

Set the camera mode switch to AUTO. With this mode, the camcorder takes care of all the settings while you concentrate on recording (📖 35). This operating mode is suitable if you just prefer not to bother with detailed camcorder settings.

M (Manual) mode

Set the camera mode switch to M. With this mode, you can enjoy full access to menus, settings and advanced functions.

Using the MENU Button and Joystick

You can navigate some of the camcorder's menus and screens using the MENU button and joystick instead of using the touch screen.

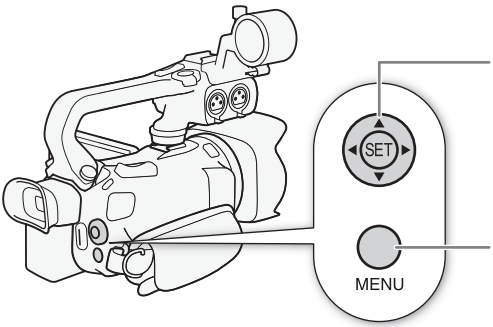

Joystick/SET button
When making a menu selection, push the joystick to move the orange selection frame in the menu. Then, press the joystick itself (in the manual, "press SET") to select the menu item indicated by the orange selection frame.

MENU button
Press the button to open the setup menus and then press again to close the menu after adjusting desired settings.

First Time Settings

Setting the Date and Time

You will need to set the date and time of the camcorder before you can start using it. The [Date/Time] screen will appear automatically when the camcorder's clock is not set.

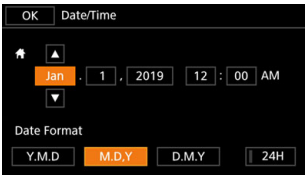

Operating modes: CAMERA MEDIA | AUTO M

1 Use the power switch to turn on the camcorder.
- The [Date/Time] screen will appear.

2 Touch a field you want to change (year, month, day, hours or minutes).
- You can also push the joystick (◀ ▶) to move between the fields.

3 Touch [▲] or [▼] to change the field as necessary.
- You can also push the joystick (▲ ▼) to change the field.

4 Set the correct date and time by changing all the fields in the same way.

5 Touch [Y.M.D], [M.D,Y] or [D.M.Y] to select the date format you prefer.
- In some screens, the date will be displayed in short form (numbers instead of month names or only the day and month), but it will still follow the order you selected.

6 Touch [24H] to use 24-hour clock or leave it unselected to use 12-hour clock (AM/PM).

7 Touch [OK] to start the clock and close the setup screen.

NOTES

- With the following settings, you can change the time zone, date and time also after the initial setup. You can also change the date format and clock format (12 or 24 hours).
  - MENU ➤ [System Setup] ➤ [Time Zone/DST]
  - MENU ➤ [System Setup] ➤ [Date/Time]
- When you do not use the camcorder for about 3 months, the built-in rechargeable lithium battery may discharge completely and the date and time setting may be lost. In such case, recharge the built-in lithium battery (📖 125) and set the time zone, date and time again.
- Using the optional GP-E2 GPS Receiver, you can have the camcorder adjust settings automatically according to the UTC date/time information received from the GPS signal (📖 82).

Changing the Language

The default language of the camcorder is English. You can set it to one of 27 languages.
Refer to *Setup Menus* (📖 27) for details on how to navigate the menu for this procedure.

Operating modes: CAMERA MEDIA | AUTO M

1 Open the [Language 🗨] screen.
MENU ➤ [🔧 1 System Setup] ➤ [Language 🗨]
2 Select the desired language and then select [OK].
3 Select [✕] to close the menu.

NOTES
- Some onscreen buttons, such as [ZOOM], [FUNC] and [MENU], will appear in English regardless of the language selected.

Changing the Time Zone

Change the time zone to match your location. The default setting is New York. In addition, the camcorder is able to retain the date and time of an additional location. This is convenient when you travel so that you can set the camcorder to match the time of your home location or that of your travel destination.
Refer to *Setup Menus* (📖 27) for details on how to navigate the menu for this procedure.

Operating modes: CAMERA MEDIA | AUTO M

1 Open the [Time Zone/DST] screen.
MENU ➤ [🔧 1 System Setup] ➤ [Time Zone/DST]
2 Select [🏠] to set the home time zone, or [✈] to set the time zone of your destination when you are traveling.
3 Select [◀] or [▶] to set the desired time zone. If necessary, select [☀] to adjust for daylight saving time.
4 Select [✕] to close the menu.

Using the Menus

The camcorder's functions can be adjusted from the setup menus, accessed by pressing the MENU button, or from the FUNC menu, accessed by touching or selecting the onscreen [FUNC] button. For details about the available menu options and settings, refer to *Menu Options* (📖 102).

Setup Menus

Following is a step-by-step explanation of how to select a typical option from the setup menus. Some menu items may require additional steps. Such operations will be explained in the respective section of the manual.
For brevity's sake, references to menu settings throughout the manual may be abbreviated as follows:
MENU ➤ [🔧 1 System Setup] ➤ [Language 💬] ➤ Desired option

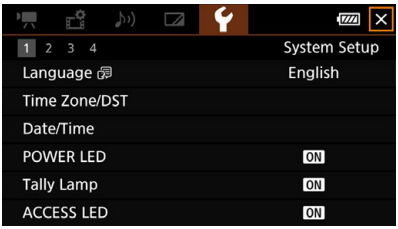

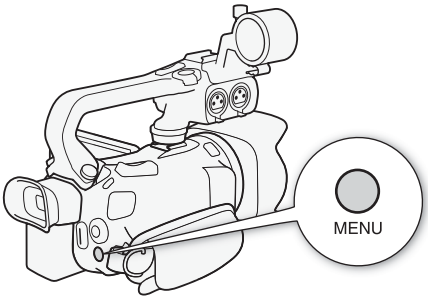

To use the touch panel

1 Press the MENU button.

2 Touch the icon of the desired setup menu from the top row.
- In the example, the 🔧 icon, corresponding to the [System Setup] menu.

3 Touch the desired menu item ([Language 💬], in the example).
- If the desired menu item does not appear in the menu page displayed, drag your finger left/right to scroll through other menu pages.
- For main procedures, the page number may be given in the manual (1, in the example). If you know the page number, you can touch the number icon on the top left of the screen to open directly the desired menu page.
- The page number may differ depending on whether the camcorder is in CAMERA mode or MEDIA mode. Throughout the manual, procedures for functions that can be used in both modes give the page number in CAMERA mode.

4 Touch the desired setting option and then touch [✕] to close the menu.
- You can touch [↩] to return to the previous menu page.

To use the joystick

1 Press the MENU button.

2 Push the joystick (◀▶) to select the icon of the desired setup menu.
- In the example, the icon, corresponding to the [System Setup] menu.
- If one of the icons in the top row is not selected when you open the menu, first push the joystick (▲▼) to move the orange selection frame to one of the icons.

3 Push the joystick (▲▼) to select the desired menu item ([Language], in the example) and then press SET.
- If the desired menu item does not appear in the menu page displayed, push the joystick (◀▶) to scroll through other menu pages.
- For main procedures, the page number may be given in the manual (1, in the example), making it easier to find the desired menu page.

4 Push the joystick (▲▼) to select the desired setting option and then press SET.

5 Press the MENU button to close the menu.
- You can push the joystick to highlight the [↩] button and press SET to return to the previous menu page. You can also highlight the [✕] button and press SET to close the menu.

NOTES
- Touching [✕] or pressing the MENU button at any time closes the menu.
- Unavailable items may appear grayed out.

FUNC Menu

In CAMERA mode, the FUNC menu offers a quick way to control various shooting related functions such as white balance, exposure, focus, etc. Available functions are more limited in AUTO mode.

To use the touch panel

1 Touch [FUNC] on the shooting screen.

2 Touch the icon of the desired function on the left column.
- If necessary, touch [∧]/[∨] to scroll up/down.

3 Touch the icon of the desired setting on the bottom row.

4 Touch [✕] to close the FUNC menu or [↩] to return to the left column.

FUNC menu in M mode

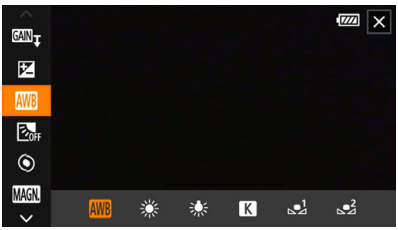

To use the joystick

1 On the shooting screen, push the joystick to select [FUNC] and then press SET.

2 Push the joystick (▲▼) to select the desired icon from the left column and then press SET.

3 Push the joystick (◀▶) to select the desired icon from the bottom row and then press SET.
- To select a value from an adjustment dial, first push the joystick (▼) to highlight the dial in orange and then (◀▶) to select the desired value.

4 Select [✕] to close the FUNC menu or [↩] to return to the left column.
- From the left column, push the joystick (▶) to select the [✕] icon and then press SET. From the bottom row, push the joystick (▲) once and then (◀▶) to select the desired icon.

NOTES

- Depending on the selected function, other buttons, adjustment dials, and other controls may appear on the screen. These are explained in the respective section of the manual.

Using SD Cards

The camcorder records clips and photos on commercially available Secure Digital (SD) cards[1]. The camcorder has two SD card slots and you can use two SD cards (in the manual, "SD card A" and "SD card B") to record on both simultaneously or to automatically switch to the other SD card when the SD card in use is full (📖 32).

Initialize SD cards (📖 32) when you use them with this camcorder for the first time.

[1] The SD card is used also to save menu settings files.

Compatible SD Cards

The following types of SD cards[2] can be used with this camcorder. For the latest information about SD cards tested for use with this camcorder, visit your local Canon website.

SD card type:	SD cards	SDHC cards	SDXC cards
SD Speed Class[3]:	CLASS 6	CLASS 10	
UHS Speed Class[3]:	Speed Class U1	Speed Class U3	

[2] As of February 2019, the clip recording function has been tested using SD cards made by Panasonic, Toshiba and SanDisk.

[3] UHS and SD Speed Class are standards that indicate the minimum guaranteed data transfer rate of SD cards.
To record 4K clips with a resolution of 3840x2160 (📖 37) or using slow & fast motion recording (📖 38), we recommend using SD cards rated UHS Speed Class U3.

IMPORTANT

- After repeatedly recording, deleting and editing clips (if the SD card is fragmented), you may notice slower writing speeds to the card and recording may even stop. In such case, save your recordings and initialize the card with the camcorder. Be sure to initialize SD cards especially before shooting important scenes.
- **About SDXC cards:** You can use SDXC cards with this camcorder but SDXC cards are initialized by the camcorder using the exFAT file system.
  - When using exFAT-formatted cards with other devices (digital recorders, card readers, etc.), make sure that the external device is compatible with exFAT. For more information on compatibility, contact the computer, operating system or card manufacturer.
  - If you use exFAT-formatted cards with a computer OS that is not exFAT-compatible, you may be prompted to format the card. In such case, **cancel the operation to prevent data loss**.

NOTES

- Proper operation cannot be guaranteed for all SD cards.

Inserting and Removing an SD Card

1 Turn off the camcorder (①).
- Make sure the POWER/CHG indicator is off.

2 Open the SD card compartment cover (②).

3 Insert the SD card straight, with the label facing the front of the camcorder, all the way into one of the SD card slots (③).
- You can also use two cards, one in each SD card slot.

4 Close the SD card compartment cover.
- Do not force the cover closed if the SD card is not correctly inserted.

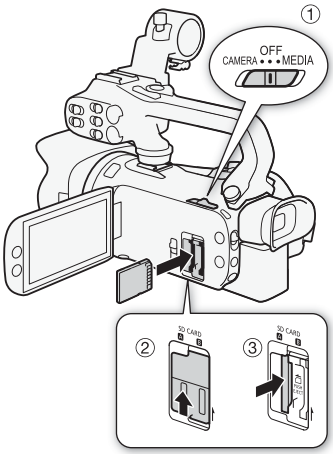

To remove the SD card

1 Make sure the ACCESS indicator is off.

2 Push the SD card once to release it. When the SD card springs out, pull it all the way out.

ACCESS (SD card access) indicator

SD card access indicator	SD card status
Red (on or flashing)	Accessing the SD card(s).
Off	Neither SD card is being accessed or no SD cards are inserted in the camcorder.

If you set MENU ➤ [System Setup] ➤ [ACCESS LED] to [OFF Off], the ACCESS indicator will not illuminate.

IMPORTANT
- Turn off the camcorder before inserting or removing an SD card. Inserting or removing a card with the camcorder on may result in permanent data loss.
- SD cards have front and back sides that are not interchangeable. Inserting an SD card facing the wrong direction can cause a malfunction of the camcorder. Be sure to insert the SD card as described in step 3.

Initializing an SD Card

Initialize SD cards when you use them with this camcorder for the first time. You can also initialize a card to permanently delete all the recordings it contains.

Operating modes: CAMERA MEDIA | AUTO M

1 Select [Initialize] for the desired SD card.
MENU ➤ [2 Recording Setup] ➤ [Initialize SD] ➤ [A Mem. Card A] or [B Mem. Card B] ➤ [Initialize]

2 Select [Yes].

3 When the confirmation message appears, select [OK] and then select [✕].

IMPORTANT

- Initializing an SD card will permanently erase all recordings. Lost data cannot be recovered. Make sure you save important recordings in advance (📖 100).
- Depending on the SD card, the initialization may take up to a few minutes.

Selecting the SD Card for Recordings

You can select the SD card on which clips and photos will be recorded.

Operating modes: CAMERA MEDIA | AUTO M

1 Select [Recording Media].
MENU ➤ [1 Recording Setup] ➤ [Recording Media]

2 Select the desired SD card ([A Mem. Card A] or [B Mem. Card B]) for recording clips ([Rec Media for Movies]) and/or photos ([Rec Media for Photos]).

3 Select [✕].
- After closing the menu, the icon of the SD card selected for recording clips will appear on the screen.

Dual Recording and Relay Recording

The camcorder features two convenient recording methods that can be used when both card slots contain an SD card: dual recording and relay recording.

Dual recording: This function records the same clip simultaneously to both SD cards, which is a convenient way to make a backup copy of your recordings while you record.

Relay recording: This function allows you to continue recording on the other SD card without interruption when the SD card you are using becomes full.

Operating modes: CAMERA MEDIA | AUTO M

1 Select [Dual/Relay Recording].
MENU ➤ [1 Recording Setup] ➤ [Dual/Relay Recording]

2 Select [Dual Recording] or [A Relay Recording] (or [B Relay Recording]) and then select [✕].
- When dual recording is activated, the status of both SD cards will appear at the top right of the screen.
- Select [Standard Recording] to not use either function.

NOTES
- Relay recording is available from SD card slot A to SD card slot B, and vice versa, but the switch will be performed only once.
- After saving to a computer relay clips that were originally recorded on different SD cards, you can use the MP4 Join Tool to join the files and save them as a single clip (100).
- If an SD card becomes full during dual recording, recording on both cards will stop. On the other hand, if an error occurs with one of the SD cards, recording will continue on the other card.
- Dual recording cannot be used together with slow & fast motion recording.

Recovering Clips

Some actions, such as suddenly turning off the camcorder or removing the SD card while data is being recorded, can cause data errors in the recorded clip. You may be able to recover clips with corrupted data with the following procedure.

Operating modes: CAMERA MEDIA | AUTO M

1 Open the index screen with the clip you wish to recover (88).

2 Select the corrupted clip (a clip with the ? icon instead of a thumbnail image).

3 When prompted to recover the data, select [Yes].
- The camcorder will attempt to recover the corrupted data.

4 When the confirmation message appears, select [OK].

NOTES
- In the index screen, recovered clips appear with a special playback icon instead of the usual thumbnail.
- This procedure may delete clips shorter than 0.5 seconds in length.
- In some cases, it may not be possible to recover the data. This is more likely when the file system is corrupted or the SD card is physically damaged.
- Only clips recorded with this camcorder can be recovered. Photos cannot be recovered.

3 Recording

Recording Clips and Photos

This section explains the basics of recording clips* and photos. For details on recording audio, refer to *Recording Audio* (📖 68).

Before making important recordings for the first time, make test recordings using the video configuration(s) you plan to use to check that the camcorder operates correctly. Should the camcorder fail to operate correctly, refer to *Troubleshooting* (📖 116).

* "Clip" refers to a single movie unit recorded with a single recording operation.

Basic Recording

When you use AUTO mode to shoot video and take photos, the camcorder will automatically adjust various settings for you. In M mode, you can manually adjust the focus, exposure and many other settings according to your needs and preferences.

Operating modes: CAMERA MEDIA | AUTO M

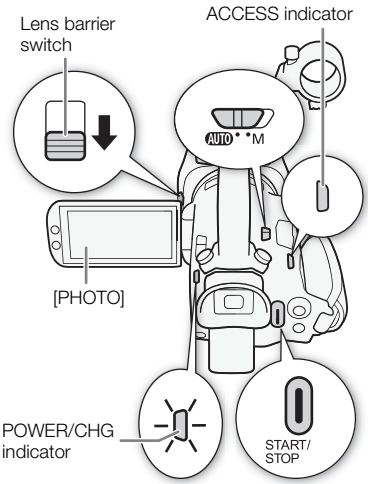

1 Open the lens barrier.
- Set the lens barrier switch to OPEN.

2 Set the camera mode switch to the desired position.
- Set it to AUTO (AUTO mode) or M (M mode), according to how you want to use the camcorder.

3 Set the power switch to CAMERA.
- The POWER/CHG indicator will illuminate in green.

To record video

Press the START/STOP button to begin recording.

- During recording, ● will appear on the screen. Additionally, if the handle unit is attached to the camcorder, the tally lamp will illuminate.
- The ACCESS indicator will flash from time to time while the clip is being recorded.
- Press the START/STOP button again to pause the recording. ● will change to ■ and the clip will be recorded on the SD card selected for recording clips. The camcorder will enter record standby mode. The tally lamp will also go out.
- You can also press the START/STOP button on the handle unit.

To take photos

During record standby mode, touch [PHOTO].

- In the lower center of the screen, a green icon (◉) will appear. Also, in the upper right of the screen, 📷 ▶ will appear with the icon of the SD card selected for recording photos. The ACCESS indicator will illuminate momentarily as the photo is being recorded.

When you have finished recording

1 Set the lens barrier switch to CLOSED to close the lens barrier.
2 Make sure that the ACCESS indicator is off.
3 Set the power switch to OFF.
4 Close the LCD panel and return the viewfinder to its retracted position.

IMPORTANT

- Be sure to save your recordings regularly (📖 100), especially after making important recordings. Canon shall not be liable for any loss or corruption of data.

NOTES

- The START/STOP button on the handle unit has a lock lever to prevent accidental operation. Set the lock lever to 🔒 in cases such as when you do not want a recording inadvertently paused or do not plan to use this START/STOP button. Return the lever to its previous position to enable use of the START/STOP button again.
- You can set **MENU** ➤ [Recording Setup] ➤ [Rec Command] and [HDMI Time Code] to [ON On] to use the camcorder's START/STOP button to control also the recording operation of a compatible external recorder connected to the SDI OUT terminal (XA45 only) or HDMI OUT terminal.
- The maximum continuous recording time of a single clip is 6 hours. After that, a new clip will be created automatically and recording will continue as a separate clip.
- **About AUTO mode:** When the camcorder is in AUTO mode, it will automatically adjust settings such as focus, exposure (aperture, shutter speed and gain) and white balance, depending on the scene being shot. Additionally, when a subject's face is detected, the camcorder will automatically keep the subject in focus and optimize the exposure.
- A video recording will be saved as separate clips in the following cases:
  - When the camcorder switches to the other SD card while recording video due to the relay recording function (📖 32).
  - The video (stream) file in the clip will be split approximately every 4 GB. Playback with the camcorder will be continuous.

  After saving the separate split clips to a computer, you can use the MP4 Join Tool to join the files and save them as a single clip (📖 100).
- Photos are recorded as JPG files. The camcorder can take photos during record standby mode.
- Photos cannot be recorded when pre-recording is activated.
- When recording in bright places, it may be difficult to use the LCD screen. In such case, use the viewfinder or adjust the brightness of the screen (📖 108).
- When you need to record for a long time with the camcorder set on a tripod, you can close the LCD panel and use only the viewfinder in order to save power when using a battery pack (📖 20).

Reviewing the Latest Clip Recorded

You can review the last 4 seconds of the last clip recorded with the camcorder without switching to MEDIA mode. While reviewing the clip, there will be no sound from the built-in speaker.

1 Record a clip.

2 After you finish recording a clip, press the button.

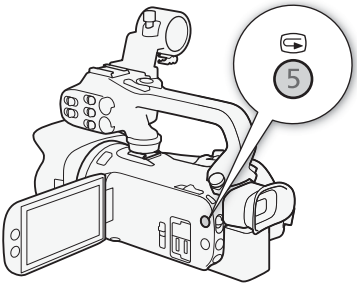

Video Configuration: Resolution, Bit Rate and Frame Rate

With the following procedures you can set the video configuration used for recording clips. Select the combination of resolution/bit rate and frame rate settings that best matches your creative needs. The color sampling will be YCbCr 4:2:0, 8 bit. Available options for some settings may change depending on previous selections for other settings. See the table following the procedures for a summary.
For details on recording audio, refer to *Recording Audio* (68).

Operating modes: CAMERA MEDIA | AUTO M

Selecting the Resolution and Bit Rate

1 Select [MP4 Resolution].
MENU ➤ [1 Recording Setup] ➤ [MP4 Resolution]

2 Select the desired option and then select [✕].
- The selected resolution and bit rate will appear at the right of the screen.

Selecting the Frame Rate

1 Select [MP4 Frame Rate].
MENU ➤ [1 Recording Setup] ➤ [MP4 Frame Rate]

2 Select the desired option and then select [✕].
- The icon of the selected frame rate will appear at the right of the screen.

Available video configuration settings

Resolution (Bit rate*)	Frame rate		
	59.94P	29.97P	23.98P
3840x2160 (150 Mbps)	—	●	●
1920x1080 (35 Mbps)	●	●	●
1920x1080 (17 Mbps)	●	●	●
1280x720 (8 Mbps)	●	—	—

* The camcorder uses a variable bit rate (VBR).

NOTES
- For details on approximate recording times, refer to *Approximate recording times* (134).

Slow & Fast Motion Recording

You can record clips that have a slow motion or fast motion effect during playback, simply by selecting the desired slow/fast motion rate. Available slow/fast motion rates will vary depending on the resolution and frame rate currently selected. Sound is not recorded when slow & fast motion recording is activated.

Operating modes: CAMERA MEDIA | AUTO M

1 Select [Slow & Fast Motion].
MENU ➤ [1 Recording Setup] ➤ [Slow & Fast Motion]

2 Select the desired slow & fast motion rate and then select [✕].
- Select [OFF] to turn off slow & fast motion recording.
- or and the selected rate will appear on the right of the screen.

Available slow/fast motion rates

Resolution	Frame rate	Available slow/fast motion rates
3840x2160	29.97P	x2, x4, x10, x20, x60, x120, x600, x1200
	23.98P	x0.8
1920x1080	59.94P	x2, x4, x10, x20, x60, x120, x600, x1200
	29.97P	x0.5
	23.98P	x0.4, x0.8
1280x720	59.94P	x2, x4, x10, x20, x60, x120, x600, x1200

NOTES

- Slow & fast motion recording cannot be used together with the following functions.
  - Dual recording
  - Pre-recording
  - Relay recording
  - Color bars
- The maximum continuous recording time of a single clip using slow motion recording is the equivalent of 6 hours of playback time, at which point, recording will stop. Consequently, it differs depending on the slow motion rate used. For example, when the [x0.5] rate is selected, the maximum continuous recording time will be 3 hours (which, played back at x0.5 slow motion, equal 6 hours of playback time). Conversely, fast motion recording will not stop in such a way.
- Changing the video configuration will deactivate slow & fast motion recording.
- While slow & fast motion recording is activated, the recording command signal will not be output from the SDI OUT terminal (XA45 only) or HDMI OUT terminal.
- About the time code when slow & fast motion recording is activated:
  - The time code mode can be set to [REGEN. Regen.], or to [PRESET Preset] with [RECRUN Rec Run] running mode.
  - If the time code running mode was set to [FREE RUN Free Run], the time code running mode will be changed automatically to [RECRUN Rec Run] when slow & fast motion recording is activated.
  - When slow & fast motion recording is turned off, the time code running mode will return to its previous setting.
  - The time code signal cannot be output from the SDI OUT terminal (XA45 only) or HDMI OUT terminal.

Shooting Modes

In M mode, the camcorder offers a number of shooting modes that give you varying degrees of control over the camcorder's settings. Select the shooting mode most appropriate to your needs or creative vision and adjust manually those settings you wish to control, letting the camcorder take care of the rest.
Shooting modes cannot be used when infrared recording is activated.

Operating modes: CAMERA MEDIA | AUTO M

1 Select the shooting mode button.

2 Select the desired shooting mode and then select [✕].
- The shooting mode button will show the selected mode's icon.

Available shooting modes

For details on shooting modes other than Special Scene modes, refer to Exposure Adjustment (📖 42).

Shooting mode	Description	📖
P (Programmed AE)	The camcorder automatically sets the shutter speed, aperture and gain.	43
Tv (Shutter Priority AE)	You manually set the shutter speed while the camcorder automatically adjusts the aperture and gain.	43
Av (Aperture Priority AE)	You manually set the aperture and ND filter while the camcorder automatically adjusts the shutter speed and gain.	43
M (Manual Exposure)	You manually set the shutter speed, aperture and gain, giving you full control over the exposure.	42
Special Scene modes	These modes offer preset combinations of settings optimized for specific situations.	40

Special Scene Modes

Using a Special Scene mode can be an easy and convenient alternative to adjusting detailed exposure settings.

[Portrait] The camcorder uses a large aperture, to achieve a sharp focus on the subject while blurring the background.

[Sports] To record sports scenes, such as sporting events or dance scenes.

[Night Scene] To record nightscapes with lower noise.

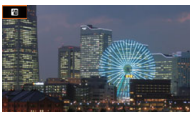

[Snow] To record in bright ski resorts without the subject being underexposed.

[Beach] To record on a sunny beach without the subject being underexposed.

[Sunset] To record sunsets in vibrant colors.

[Low Light] To record in low-light situations.

[Spotlight] To record spotlit scenes.

[Fireworks] To record fireworks.

NOTES

- [Portrait]/[Sports]/[Snow]/[Beach]: The picture may not appear smooth during playback.
- [Portrait]: The blur effect of the background increases the more you zoom in (T).
- [Snow]/[Beach]: The subject may become overexposed on cloudy days or in shaded places. Check the image on the screen.
- [Low Light]:
  - Moving subjects may leave a trailing afterimage.
  - Picture quality may not be as good as in other modes.
  - White points may appear on the screen.
  - Autofocus may not work as well as in other modes. In such case, adjust the focus manually.
- [Low Light]/[Fireworks]: To avoid camcorder blur (blur due to the camcorder moving) we recommend using a tripod.

Exposure Adjustment

At times, the overall exposure obtained automatically by the camcorder may not be best for your shot. You can select a shooting mode that will give you a varying amount of control over the aperture, shutter speed and gain, from partial to full control, while the camcorder automatically adjusts the settings that you do not.

Operating modes: CAMERA MEDIA | AUTO M

Manual Exposure (M)

This shooting mode gives you the most control over shooting settings as you can set the aperture, shutter speed and gain to get the exposure that you want.

1 Set the shooting mode to [M Manual Exposure] (📖 39).
- The aperture value, shutter speed and gain value will appear at the left of the screen.

2 Set the aperture, shutter speed and gain.

Aperture: [FUNC] ➤ [IRIS Aperture]
Shutter speed: [FUNC] ➤ [SHTR Shutter Speed]
Gain: [FUNC] ➤ [GAIN Gain]
- An adjustment dial will appear on the screen.

3 Drag your finger along the dial to set the desired value.
- You can select [ZEBRA OFF] to display the zebra pattern (📖 46, step 2) and check for overexposed areas.

4 Repeat steps 2 and 3 as necessary to adjust the exposure to the desired level.

5 Select [✕].

Available settings

Aperture[1]		F1.8, F2.0, F2.2, F2.4, F2.6, F2.8, F3.2, F3.4, F3.7, F4.0, F4.4, F4.8, F5.2, F5.6, F6.2, F6.7, F7.3, F8.0
	ND filter	When the aperture value is F4.0 or higher: ND1/2, ND1/4, ND1/8
Shutter speed[2]		1/6[3], 1/8, 1/9, 1/10, 1/12, 1/15, 1/17, 1/20, 1/24, 1/25, 1/30, 1/34, 1/40, 1/48, 1/50, 1/60, 1/75, 1/90, 1/100, 1/120, 1/150, 1/180, 1/210, 1/250, 1/300, 1/360, 1/420, 1/500, 1/600, 1/720, 1/840, 1/1000, 1/1200, 1/1400, 1/1700, 1/2000
Gain		0.0 dB to 24.0 dB (1-dB increments)

[1] Available values depend on the zoom position. Aperture values displayed on the screen are for reference only.
[2] During slow & fast motion recording, available values will vary depending on the selected slow/fast motion rate.
[3] Only when the frame rate is 23.98P.

The exposure bar
When the shooting mode is set to **M**, the exposure bar will appear on the screen, showing the optimal automatic exposure and current exposure. When the difference between current and optimal exposure is larger than ±2 EV, the indicator will flash at the edge of the exposure bar.

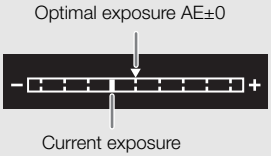

NOTES
- You can adjust the aperture, shutter speed and gain using the CUSTOM dial (📖 84).

Automatic Exposure

Programmed AE (P)

The camcorder automatically sets the shutter speed, aperture and gain (for clips) but you will have the option to use other functions that are not available in AUTO mode.

Set the shooting mode to [P Programmed AE].

Shutter Priority AE (Tv)

With this shooting mode you set the shutter speed manually, for example, to capture fast-moving subjects in sharp focus or to obtain a brighter image in low-light situations. The camcorder will automatically adjust other settings to obtain the best exposure.

1 Set the shooting mode to [Tv Shutter-Pri. AE] (📖 39).
- The shutter speed will appear at the left of the screen.

2 Open the shutter speed screen.
[FUNC] ➤ [SHTR Shutter Speed]
- An adjustment dial will appear on the screen.
- You can select [ZEBRA OFF] to display the zebra pattern (📖 46, step 2) and check for overexposed areas.

3 Drag your finger along the dial to set the desired shutter speed.
- You can also adjust the shutter speed using the CUSTOM dial (📖 84).
- For available shutter speeds, see the manual exposure table (📖 42).

4 Select [✕].

Aperture Priority AE (Av)

With this shooting mode you set the aperture value manually to control the depth of field, for example, in order to defocus the background and make the subject stand out more. The camcorder will automatically adjust other settings to obtain the best exposure.

1 Set the shooting mode to [Av Aperture-Pri. AE] (📖 39).
- The aperture value will appear at the left of the screen.

2 Open the aperture screen.
[FUNC] ➤ [IRIS Aperture]
- An adjustment dial will appear on the screen.
- You can select [OFF] to display the zebra pattern (📖 46, step 2) and check for overexposed areas.

3 Drag your finger along the dial to set the desired aperture value.
- You can also adjust the aperture value using the CUSTOM dial (📖 84).
- For available aperture values, see the manual exposure table (📖 42)

4 Select [✕].

NOTES
- When the shooting mode is set to Tv or Av, depending on the brightness of the subject, the camcorder may not be able to set the appropriate exposure. In such case the shutter speed (Tv) or aperture value (Av) will flash on the screen. Change the aperture/shutter speed as necessary.

Touch Exposure

You can touch the screen to optimize the exposure for a specific subject or area. The camcorder will automatically adjust the exposure for the selected point and lock the exposure settings. You can even touch a bright area of the image to try to avoid overexposure (Highlight AE). This function can only be used when the shooting mode is set to P, Tv, Av or one of the Special Scene modes, except for [Fireworks].

1 Open the exposure screen.
[FUNC] ➤ [Exposure Comp.]
- An adjustment dial will appear on the screen.
- You can select [OFF] to display the zebra pattern (📖 46, step 2) and check for overexposed areas.

2 To use the Highlight AE function, change the touch exposure settings.
[ ] ➤ [H Highlights] ➤ [↩]

3 Touch the desired area on the LCD screen to optimize and lock the exposure.
- The mark will flash and the exposure will be adjusted automatically so the area you touched will be correctly exposed.
- The exposure compensation value ±0 and ✳ will appear on the screen. In addition, [✳] will indicate that the exposure is locked.
- Select [✳] to return the camcorder to automatic exposure.

4 If necessary, drag your finger along the dial to compensate the exposure.
- You can select a compensation level from –3 to +3 in 1/4 increments.

5 Select [✕].
- The exposure compensation value and ✳ will appear at the left of the screen.

Exposure Lock (AE Lock)

You can lock the current exposure settings and use them even when you reframe the picture. This function can only be used when the shooting mode is set to **P**, **Tv**, **Av** or one of the Special Scene modes, except for [Fireworks].

1 Open the exposure screen.

[FUNC] ➤ [Exposure Comp.]

- An adjustment dial will appear on the screen.
- You can select [OFF] to display the zebra pattern (📖 46, step 2) and check for overexposed areas.

2 Select [✳] to lock the current exposure.

- The exposure compensation value ±0 and ✳ will appear on the screen. In addition, [✳] will indicate that the exposure is locked.
- Select [✳] again to return the camcorder to automatic exposure.

3 Drag your finger along the dial to further compensate the exposure.

- You can select a compensation level from –3 to +3 in 1/4 increments.
- Depending on the brightness of the image and the exposure locked, some values may not be available and the available exposure compensation range may differ.

4 Select [✕].

- The exposure compensation value and ✳ will appear at the left of the screen.

Exposure Compensation

You can compensate the exposure that was set using automatic aperture, in order to darken or lighten the image.
This function can only be used when the shooting mode is set to **P**, **Tv** or **Av**.

1 Open the exposure screen.

[FUNC] ➤ [Exposure Comp.]

- If the exposure was locked, select [✳] to unlock the automatic exposure.
- An adjustment dial will appear on the screen.
- You can select [OFF] to display the zebra pattern (📖 46, step 2) and check for overexposed areas.

2 Drag your finger along the dial to compensate the exposure.

- You can select a compensation level from –2 to +2 in 1/4 increments.

3 Select [✕].

- [AE] and the exposure compensation value will appear at the left of the screen.

NOTES

- Setting the exposure compensation is not available during infrared mode.
- You can adjust the exposure compensation value using the CUSTOM dial (📖 84).
- The locked exposure will return to automatic exposure in the following cases:
  - When the power switch, camera mode switch or INFRARED switch is operated.
  - When the shooting mode is changed.
  - When the video configuration is changed.

ND Filter

Using the ND filter allows you to open up the aperture to obtain a shallower depth of field even when recording in bright surroundings. You can also use the ND filter to avoid the soft focus caused by diffraction when using small apertures. The ND filter can be set when the aperture value is F4.0.
This function can only be used when the shooting mode is set to P, Tv, Av or M.

1 Select [ND Filter].
MENU ➤ [3 Camera Setup] ➤ [ND Filter]

2 Select the desired option and then select [✕].

ND filter operation

ND filter option	Shooting mode	Description
[A Automatic]	Av, M	When the aperture value is F4.0, you can select the ND filter setting manually.
	P, Tv	The camcorder will use the ND filter automatically for automatic exposure.
[OFF Off]	Av, M	The ND filter will not be used.
	P, Tv	The camcorder will not use the ND filter for automatic exposure.

NOTES

- The ND filter is not available with the [Fireworks] Special Scene mode.
- The ND filter will be set to [A Automatic] when the camera mode is AUTO or the shooting mode is set to a Special Scene mode (except for [Fireworks]).

Using the Zebra Pattern

You can use the zebra pattern to identify areas that might be overexposed, so you can correct the exposure appropriately. The camcorder offers two levels of zebra pattern: With 100% only areas that will lose detail in the highlight areas will be identified, while 70% will identify also areas that are dangerously close to losing detail.

1 Select the aperture, shutter speed, gain or exposure compensation.
Aperture: [FUNC] ➤ [IRIS Aperture]
Shutter speed: [FUNC] ➤ [SHTR Shutter Speed]
Gain: [FUNC] ➤ [GAIN Gain]
Exposure compensation: [FUNC] ➤ [Exposure Comp.]

2 Select the desired zebra level.
[OFF] ➤ [70 70%] or [100 100%] ➤ [✕]
- To turn off the zebra pattern, select [OFF Off] instead.
- To return to the previous screen and adjust other settings, select [↩] instead of [✕].
- The zebra pattern will appear on the overexposed areas of the picture.

NOTES

- Using the zebra pattern will not affect your recordings.

Backlight Correction

When you need to record a scene with constant backlight conditions, you can use backlight correction to make the picture, especially the darker areas, brighter.
This function cannot be used when the shooting mode is set to [Fireworks].

1 Select [BLC Always On].
[FUNC] ➤ [BLC Always On]

2 Select [On] and then select [✕].
- will appear at the left of the screen and the exposure will be adjusted to account for backlight conditions.
- Alternatively, you can set an assignable button to [BLC Always On] (📖 85). In that case, press the assignable button to turn the backlight correction on and off.

NOTES
- This camcorder also has an automatic backlight correction feature with the **MENU** ➤ [Camera Setup] ➤ [Auto Backlight Correction] setting.
- Backlight correction is not available during infrared mode.
- Backlight correction will be deactivated in the following cases:
  - When the power switch, camera mode switch or INFRARED switch is operated.
  - When the shooting mode is changed.
  - When the frame rate is changed.

Automatic Gain Control (AGC) Limit

When recording in dark surroundings, the camcorder will automatically increase the gain to try to get a brighter picture. By setting a maximum gain value, you can limit the amount of noise in the picture and keep a darker look. This function can only be used when the shooting mode is set to **P**, **Tv** or **Av**.

Operating modes: CAMERA MEDIA | AUTO **M**

1 Open the AGC limit adjustment screen.
[FUNC] ➤ [GAIN AGC Limit] ➤ [**M**]
- An adjustment dial will appear on the screen.
- Select [**M**] again to return the camcorder to automatic gain control.

2 Drag your finger along the dial to set the desired maximum gain value.
- You can select an AGC limit from 0.0 dB to 23.0 dB. The lower the setting, the lower the AGC limit.

3 Select [✕].
- When an AGC limit is set, GAIN and the maximum gain value will appear at the left of the screen.

NOTES
- The AGC limit cannot be set in the following cases:
  - When the exposure is locked (📖 45).
  - When infrared recording is activated.
- You can adjust the AGC limit using the CUSTOM dial (📖 84).

White Balance

The camcorder uses an electronic white balance process to calibrate the picture and produce accurate colors under different lighting conditions. This function can only be used when the shooting mode is set to **P**, **Tv**, **Av** or **M**.

Operating modes: CAMERA MEDIA | AUTO M

1 Select [AWB White Balance].
[FUNC] ➤ [AWB White Balance]

2 Select the desired option and then select [✕].
- If you selected [K Color Temperature], [Set 1] or [Set 2] and wish to change the color temperature value or register a new custom white balance, continue with the appropriate procedure below instead of selecting [✕].
- The icon of the selected option will appear at the left of the screen.

To set the color temperature ([K Color Temperature])

3 Select [ ].
- An adjustment dial will appear on the screen.

4 Drag your finger along the dial to set the color temperature value.

5 Select [✕].

To set a custom white balance ([Set 1] or [Set 2])

3 Point the camcorder at a gray card or white object so that it fills the frame at the center of the screen and then select [ ].
- When the icon stops flashing, the procedure is completed. The setting is retained even if you turn off the camcorder.

4 Select [✕].

Options

[AWB Automatic]: The camcorder automatically sets the white balance for natural looking colors.

[Daylight]: To record outdoors on a bright day.

[Tungsten]: To record under tungsten and tungsten-type (3-wavelength) fluorescent lighting.

[K Color Temperature]:
Allows you to set the color temperature between 2,000 K and 15,000 K.

[Set 1], [Set 2]:
Use the custom white balance settings to make white subjects appear white under colored lighting.

NOTES

- **When you select a custom white balance:**
  - Do not adjust the zoom to the digital zoom range (light blue area of the zoom bar).
  - Reset the white balance when you change locations or the lighting or other conditions change.
  - Depending on the light source, may keep flashing. The result will still be better than with [AWB Automatic].
- If you set an assignable button to [Set WB] (85), you can press the button to register a custom white balance after you point the camcorder at a gray card or white object.
- Using a custom white balance may provide better results in the following cases:
  - Changing lighting conditions
  - Close-ups
  - Subjects in a single color (sky, sea or forest)
  - Under mercury lamps, certain types of fluorescent lights and LED lights
- Adjusting the white balance is not available when infrared recording is activated.
- If you set an assignable button to [WB WB Priority] (85), you can press the button to switch to a frequently used white balance setting pre-selected with MENU [Camera Setup] [Set WB Priority].

Using Looks

You have the option of adding a “look” to your recordings. A look is a combination of various picture settings, such as color depth and sharpness, that can enhance the recording's visual quality.
This function can only be used when the shooting mode is set to **P**, **Tv**, **Av** or **M**.

Operating modes: CAMERA MEDIA | AUTO M

1 Open the looks screen.
[FUNC] ➤ [Looks]

2 Adjust the detailed settings.
[ ] ➤ Select [–] or [+] to adjust the value
- You can also drag your finger along the adjustment bar.
- The sharpness, contrast and color depth can be adjusted as follows:
  [Sharpness]: 0 (softer image) to 7 (sharper image)
  [Contrast]: –4 (low contrast) to +4 (high contrast)
  [Color Depth]: –4 (shallower colors) to +4 (richer colors)

3 Select [✕].

NOTES
- Looks are not available during infrared mode.

Zooming

Operating modes: CAMERA MEDIA | AUTO M

To zoom in and out, you can use the focus/zoom ring, the zoom rockers on the camcorder and handle unit, or the zoom controls on the touch screen. You can also zoom using the optional RC-V100 Remote Controller (81).

In addition to the 20x optical zoom, you can turn on the digital zoom* (400x) with the MENU ➤ [Camera Setup] ➤ [Digital Zoom] setting. This camcorder also features a digital tele-converter, which allows you to enlarge the image on the screen digitally.

* Digital zoom is not available in AUTO mode or when MENU ➤ [Camera Setup] ➤ [Conversion Lens] is set to [Wide WA-H58].

Using the Focus/Zoom Ring

1 Set the focus/zoom ring switch to ZOOM.

2 Turn the focus/zoom ring to adjust the zoom.

- Turn the focus/zoom ring slowly for a slow zoom; turn it faster for faster zooms.
- The zoom bar that appears on the screen indicates the approximate zoom position.

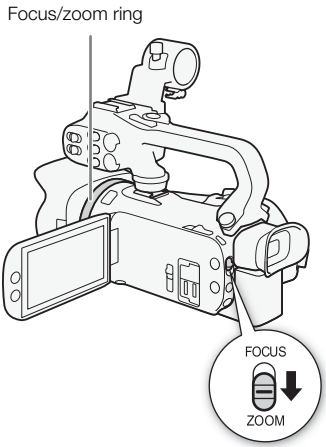

NOTES

- You can use the MENU ➤ [Camera Setup] ➤ [Focus/Zoom Ring Operation] setting to disable the focus/zoom ring's operation. You can use the MENU ➤ [Camera Setup] ➤ [Zoom Ring Direction] setting to select the direction of the focus/zoom ring's operation when it is used to adjust the zoom.
- If you turn the focus/zoom ring too quickly, the camcorder may not be able to zoom immediately. In such case, the camcorder will zoom after you finish turning the ring.

Using the Zoom Rockers

Move the zoom rocker on the camcorder or handle unit toward W (wide angle) to zoom out. Move it toward T (telephoto) to zoom in.

- By default, the grip zoom rocker (the rocker near the grip belt) operates at a variable speed – press gently for a slow zoom; press harder for faster zooms. You can perform the following procedure to adjust the zoom speed and to select a constant speed.

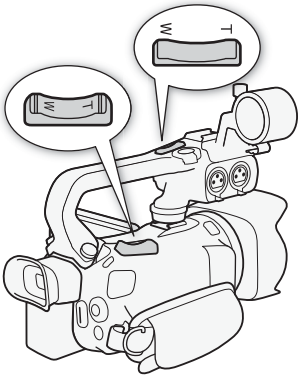

NOTES

- You can use the **MENU** ➤ [Camera Setup] ➤ [Handle Zoom Operation] setting to disable the handle unit zoom rocker's operation.

Setting the Zoom Speed

You can set the zoom speed for the zoom rockers.

W Zoom out **T** Zoom in

To set the zoom speed of the grip zoom rocker

First, set the overall zoom speed to one of three levels. Next, select whether the zoom rocker operates at a constant or variable speed. Refer to the following table for a summary of the zoom speed.

1 **Select the overall zoom speed level.**
MENU ➤ [Camera Setup] ➤ [Zoom Speed Level] ➤ Desired zoom speed level ➤ [↩]
- You can select one of three levels, [Fast], [Normal] or [Slow].

2 **Select whether to use a variable or constant zoom speed.**
[Grip Zoom Speed] ➤ [VAR] (variable) or [CONST] (constant)
- If you selected [VAR], skip to step 4.

3 **Select [◀] or [▶], or drag your finger along the adjustment bar, to set the desired constant speed.**

4 **Select [✕].**

NOTES

- When [Zoom Speed Level] is set to [Fast], the camcorder may pick up and record lens operation sounds.
- When you are using an external microphone while recording, the sound made by the camcorder's internal machinery while zooming may be recorded in the clip.
- You can use the **MENU** ➤ [Camera Setup] ➤ [Grip Zoom Operation] setting to disable the grip zoom rocker's operation.

Approximate zoom speeds* (grip zoom rocker)

[Grip Zoom Speed] setting	Selected constant speed	[Zoom Speed Level] setting		
		[Slow]	[Normal]	[Fast]
[VAR] (variable)	–	3 sec. to 3 min. 25 sec.	2.5 sec. to 2 min 10 sec.	1.8 sec.** to 45 sec.
[CONST] (constant)	1 (slowest)	3 min. 25 sec.	2 min 10 sec.	45 sec.
	16 (fastest)	3 sec.	2.5 sec.	1.8 sec.**

* Measured from full wide-angle to full telephoto.
** The camcorder will have more trouble focusing automatically while zooming.

To use high-speed zoom in standby mode

When high-speed zoom is activated and MENU ➤ [Camera Setup] ➤ [Grip Zoom Speed] is set to [VAR] (variable zoom speed), in record standby mode you will be able to zoom at the highest speed available ([Fast]). Nevertheless, the zoom speed while recording will be determined by the [Zoom Speed Level] setting.

1 Select [High-Speed Zoom].
MENU ➤ [2 Camera Setup] ➤ [High-Speed Zoom]
2 Select [ON On] and then select [✕].

NOTES

- When pre-recording is activated, the zoom speed will be determined by the [Zoom Speed Level] setting even in record standby mode.
- When [Zoom Speed Level] is set to [Fast], the zoom speed will not change even in record standby mode.

To set the speed of the handle zoom rocker

For the handle zoom rocker, first set the overall zoom speed to one of three levels. The zoom rocker operates at a constant speed that you can select. To use the zoom rocker, make sure you attach the handle unit to the camcorder in advance. Refer to the following table for a summary of the zoom speed.

1 Select the overall zoom speed level (step 1, 📖 53).
2 Select [Handle Zoom Speed].
MENU ➤ [2 Camera Setup] ➤ [Handle Zoom Speed]
3 Select [◀] or [▶], or drag your finger along the adjustment bar, to set the desired constant speed.
4 Select [✕].

Approximate zoom speeds* (handle unit zoom rocker)

Selected constant speed	[Zoom Speed Level] setting		
	[Slow]	[Normal]	[Fast]
1 (slowest)	3 min. 25 sec.	2 min. 10 sec.	45 sec.
16 (fastest)	3 sec.	2.5 sec.	1.8 sec.**

* Measured from full wide-angle to full telephoto.
** The camcorder will have more trouble focusing automatically while zooming.

Using the Touch Screen's Zoom Controls

1 Open the onscreen zoom controls.
[FUNC] ➤ [ZOOM Zoom]
- The zoom controls appear at the bottom the screen.

2 Touch the zoom controls to operate the zoom.
- Touch anywhere within the W area to zoom out or anywhere within the T area to zoom in. Touch closer to the center for a slow zoom; touch closer to the W/T icons for faster zooms.

3 Select [✕].

Using an Optional Remote Controller

The zoom speeds when using the optional RC-V100 Remote Controller or a commercially available remote control connected to the REMOTE terminal are different.

Zoom speeds for remote operation

Accessory	Zoom speed
RC-V100 Remote Controller (optional)	Variable speed: The greater the angle at which the RC-V100's ZOOM dial is rotated from the center, the faster the zoom.
Commercially available remote controls	If the remote control does not support variable zoom: Constant zoom speed. If the remote control supports variable zoom: Variable zoom according to the remote control's settings.

NOTES
- When an optional RC-V100 Remote Controller is connected to the camcorder, you can zoom with the remote controller's ZOOM dial. At default settings, turn the dial right to zoom in (T) and left to zoom out (W).

Soft Zoom Control

Soft zoom control allows you to start and/or stop the zoom gradually.

1 Select [Soft Zoom Control].
MENU ➤ [1 Camera Setup] ➤ [Soft Zoom Control]

2 Select the desired option and then select [✕].

Options

[OFF Off]: Use this setting if you do not intend to use soft zoom control.
[START Start]: Zoom starts gradually.
[STOP Stop]: Zoom stops gradually.
[START STOP Start & Stop]: Zoom start and stops gradually.

Digital Tele-Converter

Using the digital tele-converter, you can digitally increase the focal length of the camcorder by a factor of approx. 2 and record the enlarged image.

Operating modes: CAMERA MEDIA | AUTO M

1 Select [Digital Zoom].
MENU ➤ [1 Camera Setup] ➤ [Digital Zoom]
2 Select [2.0× Digital Tele-conv.] and then select [✕].
3 Open the zoom controls.
[FUNC] ➤ [ZOOM Zoom]
4 Select [2.0×] (digital tele-converter) and then select [✕].
- The center of the screen will be enlarged approximately 2 times and the 2.0× icon will appear.
- Select [2.0×] again before closing the screen to deactivate the digital tele-converter.

NOTES

- You can attach the optional tele-converter and use it in conjunction with this function to increase the effect.
- The digital tele-converter cannot be set while recording or when MENU ➤ [Camera Setup] ➤ [Conversion Lens] is set to [Wide WA-H58].
- The image is digitally processed so the image will deteriorate throughout the zoom range.
- The digital tele-converter will be deactivated if the resolution is switched between 3840x2160 and another one.

Focus Adjustment

The camcorder offers manual and automatic focus adjustment. When using manual focus, you can use the focus preset and peaking functions to assist you. When using automatic focus, you can use face detection & tracking to help make sure the subject is in focus.

Manual Focus

Use the focus/zoom ring to focus manually. Manual focus is available even after touching the screen to adjust the focus automatically.

Operating modes: CAMERA MEDIA | AUTO* M

* Focus adjustment is available using only the focus/zoom ring.

1 Set the focus/zoom ring switch to FOCUS.

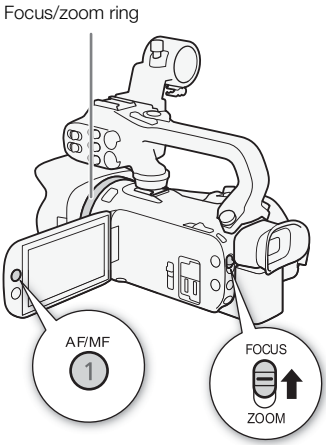

To focus using only the focus/zoom ring

2 Press the AF/MF button.
- [MF] will appear on the screen.

3 Turn the focus/zoom ring to adjust the focus.

To focus by touching the subject on the screen

2 Open the focus controls.
[FUNC] ➤ [◉ Focus]
- The focus adjustment screen will appear.

3 Touch a subject that appears inside the frame.
- The Touch AF mark (⛶) will flash and the focusing distance will be adjusted automatically.
- To return the camcorder to autofocus, touch **A**.

4 If necessary, turn the focus/zoom ring to further adjust the focus.

5 Touch [✕] to close the focus adjustment screen.

NOTES

- If you operate the zoom after focusing, the focus on the subject may be lost.
- If you focus manually and then leave the camcorder with the power turned on, the focus on the subject may be lost after a while. This possible slight shift in focus is a result of the internal temperature rising. Check the focus before resuming shooting.
- You can use the MENU ➤ [Camera Setup] ➤ [Focus/Zoom Ring Operation] setting to disable the focus/zoom ring's operation. You can use the MENU ➤ [Camera Setup] ➤ [Focus Ring Direction] and [Focus Ring Response] settings to change the direction and responsiveness of the focus/zoom ring when it is used to adjust the focus.

Focus Preset

When manual focus is activated, you can register a certain focus point and then, after you focus manually somewhere else, have the camcorder return to the preset focus position.

Operating modes: CAMERA MEDIA | AUTO M

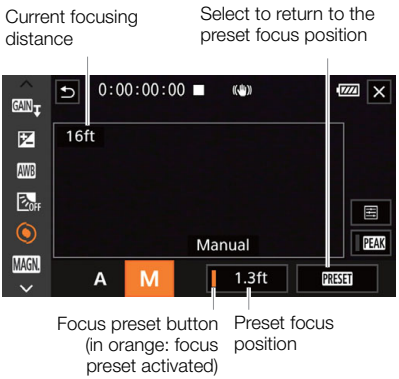

1 Activate the manual focus and adjust the focus to the desired position (57).
   - The current approximate focusing distance will appear inside the focus frame and in the focus preset button.
2 Select the focus preset button to save the current focus position.
   - The indicator inside the button will turn orange to show the focus preset function was activated.
   - Select the focus preset button again to turn off the focus preset function.
3 Adjust the focus as necessary using touch AF or the focus/zoom ring.
4 Select [PRESET] to return to the preset focus position.
   - [PRESET] will be grayed out while adjusting the focus or zoom.
   - To end focus preset, select the focus preset button.

NOTES

- The preset focus position will be canceled when the camcorder is turned off.
- Focusing distances are approximate. You can change the distance units used with the MENU ➤ [Display Setup] ➤ [Distance Units] setting.
- You can use the MENU ➤ [Camera Setup] ➤ [Focus Preset Speed] setting to set the speed at which the camcorder returns to the preset focus position.

Using the Focus Assistance Functions

In order to focus more accurately, you can use the following focus assistance functions: peaking, which creates a clearer contrast by emphasizing the outlines of the subject; and magnification, which enlarges the image on the screen. You can use peaking and magnification simultaneously for greater effect.

Peaking

When peaking is activated, the edges of objects in focus will be highlighted in red, blue or yellow on the screen. In addition, you can choose to switch the screen to black & white while peaking is activated, further emphasizing the edges.

1 Open the focus controls.
[FUNC] ➤ [◉ Focus]

2 If necessary, change the peaking settings.
[☰] ➤ Desired options ➤ [↩]
- For the black & white setting: Select [Off] or [On]. For the peaking color: Select [Red], [Blue] or [Yellow].

3 Select [PEAK] and then select [✕].
- Peaking is activated and edges are highlighted.
- Select [PEAK] again (before closing the menu) to turn off the peaking effect.

Magnification

1 Activate magnification.
[FUNC] ➤ [MAGN. Magnification] ➤ [OK]
- MAGN. appears at the lower right of the screen and the center of the screen* is magnified 2 times.
- The frame displayed at the bottom right corner of the screen (magnification frame) shows the approximate part of the image shown magnified.

2 If necessary, move around the magnification frame to check other parts of the image.
- Drag your finger on the LCD screen or push the joystick (▲▼ ◀▶).

3 Select [✕] to cancel the magnification.

* If the face detection or tracking frame is displayed on the screen, the area around the frame will be magnified instead.

NOTES

- About peaking/magnification:
  - The assistance functions are only displayed on the camcorder's screen. They will not appear on video output from the camcorder and will not affect your recordings.
  - Magnification is not available while the color bars are displayed.
- If you set an assignable button to [MAGN. Magnification] (📖 85), you can press the button to activate the magnification.
- Magnification will deactivate when you start recording but you can activate and deactivate it again while recording.

Autofocus

When autofocus is activated, the camcorder continuously adjusts the focus on the subject in the center of the screen. The focusing range is 1 cm (0.39 in.; at full wide-angle, measured from the front of the lens barrel) to ∞ and 60 cm (2 ft.; throughout the zoom range, measured from the front of the lens barrel) to ∞. Perform the following procedure to set the autofocus speed.

Operating modes: CAMERA MEDIA | AUTO M

1 During manual focus: Press the AF/MF button.
2 Select [AF Mode].
MENU ➤ [2 Camera Setup] ➤ [AF Mode]
3 Select the desired option and then select [✕].

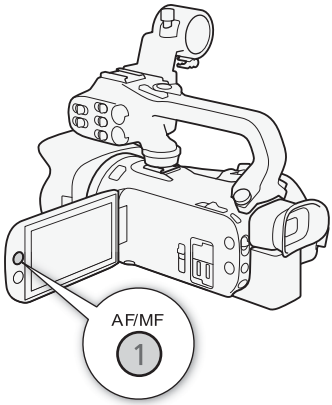

Options

[I.AF Instant AF]: Sets the autofocus to Instant AF. The focus is adjusted at the highest speed. This mode is useful even when recording in very bright or low-light surroundings. This mode uses both the TTL system and external sensor for focusing.

[M.AF Medium AF]: Sets the autofocus to Medium AF. The camcorder focuses more smoothly on the subject than when using the [I.AF Instant AF] setting. This mode uses both the TTL system and external sensor for focusing.

[AF Normal AF]: Sets the autofocus to Normal AF. The autofocus adjustment is made at a stable speed.

NOTES

- The AF mode cannot be selected in the following cases.
  - When MENU ➤ [Camera Setup] ➤ [Conversion Lens] is set to an option other than [OFF Off].
  - When infrared recording is activated.
- While using autofocus, you can turn the focus/zoom ring to focus manually. When you stop turning the ring, the camcorder returns to autofocus. This is useful in situations such as when focusing on a subject on the other side of a window.
- When the shooting mode is set to [Fireworks], the focus will be set to ∞ and cannot be changed.
- Autofocus takes longer to focus when the frame rate is 29.97P or 23.98P than when it is 59.94P.

- **About soft focus due to smaller apertures:** When recording in bright surroundings, the camcorder closes down the aperture. This may cause the picture to appear blurred and is more noticeable toward the wide angle end of the zoom range. In such case, in [M] mode, select the [P Programmed AE], [Tv Shutter-Pri. AE], [Av Aperture-Pri. AE] or [M Manual Exposure] shooting mode and set MENU ➤ [Camera Setup] ➤ [ND Filter] to [A Automatic].
- When recording under dark conditions, the focusing range narrows and the picture may appear blurred.
- Autofocus may not work well on the following subjects or in the following cases. In such case, focus manually.
  - Reflective surfaces
  - Subjects with low contrast or without vertical lines
  - Fast moving subjects
  - When subjects are at different distances.
  - Through dirty or wet windows
  - Night scenes

Face Detection & Tracking

During autofocus, the camcorder automatically detects people's faces and uses this information to select the optimal focus and exposure settings. When a face cannot be detected, the camcorder can adjust the focus using autofocus. When multiple faces are detected, you can use tracking to have the camcorder track and optimize settings for a different subject. You can also use tracking to optimize settings for moving subjects such as pets. You must use the touch screen to select the subject.
By default, the face detection & tracking function is activated. If it was turned off, start the procedure from step 1 to activate it. In [AUTO] mode, face detection & tracking is always activated and cannot be turned off.

Operating modes: [CAMERA] [MEDIA] | [AUTO] [M]

1 Activate face detection & tracking.
MENU ➤ [Camera Setup] ➤ [Face Detection & Tracking] ➤ [ON On] ➤ [✕]
- will appear at the left of the screen.

2 Point the camcorder at the subject.
- A white frame will appear around the face of the main subject. Other faces will have gray frames.

Main subject

3 If necessary, touch the desired subject on the screen to select a different main subject.
- **To select a different person:** Touch a face with a gray frame. The face detection frame will change to a white double frame (tracking frame). The camcorder will track the subject as it moves.
- **To select other moving subjects:** In autofocus mode only, you can touch [] and then touch any other moving subject, such as a pet. The frame will change to a white double frame (tracking frame). The camcorder will track the subject as it moves.
- Touch [OFF] to remove the frame and cancel the tracking.

Limiting Autofocus to Faces

While using autofocus, you can limit the autofocus function only to cases when a subject's face is detected and use manual focus for all other scenes. The camcorder will also adjust the brightness when focusing automatically on the subject's face.

Set an assignable button to [Face Only AF] (85) and press the button.

- appears on the screen.

NOTES

- The camcorder may mistakenly detect the faces of non-human subjects. In such case, turn face detection & tracking off.
- When face detection & tracking is activated, the slowest shutter speed used by the camcorder is 1/30 (1/24 if the frame rate is set to 23.98P).
- In certain cases, faces may not be detected correctly. Typical examples include:
  - Faces extremely small, large, dark or bright in relation to the overall picture.
  - Faces turned to the side, upside down, at a diagonal or partially hidden.
- Face detection & tracking cannot be used in the following cases.
  - When the shooting mode is set to [Night Scene], [Low Light] or [Fireworks].
  - When the shutter speed used is slower than 1/30 (1/24 if the frame rate is set to 23.98P).
  - When the digital zoom is activated at more than 80x zoom.
  - During infrared mode.
- Touching somewhere with a color or pattern unique to the subject will make it easier to track. However, if there is another subject in the vicinity that shares similar characteristics to the selected subject, the camcorder may start tracking the incorrect subject. Touch the screen again to select the desired subject.
- In certain cases, the camcorder may not be able to track the subject. Typical examples include:
  - Subjects extremely small or large in relation to the overall picture.
  - Subjects too similar to the background.
  - Subjects lacking sufficient contrast.
  - Fast moving subjects.
  - When shooting indoors with insufficient lighting.
- Autofocus limited to faces will be deactivated in the following cases:
  - When the power switch, camera mode switch or INFRARED switch is operated.
  - In the same cases that face detection & tracking cannot be used (see above).
  - When the camcorder is switched between autofocus and manual focus.
  - When the assignable button is no longer assigned to [Face Only AF].

Image Stabilization

Use the image stabilizer to compensate for camcorder shake in order to achieve steadier shots. The camcorder offers 3 methods of image stabilization.

Standard IS (): Standard IS compensates for a lower degree of camcorder shake, for example, for handheld shots while you remain stationary, and is suitable for shooting natural-looking scenes.

Dynamic IS (): Dynamic IS compensates for a higher degree of camcorder shake, such as when shooting while walking, and is more effective as the zoom approaches full wide angle.

Powered IS (): Powered IS is most effective when you are stationary and zooming in on far subjects using high zoom ratios (the more you approach the telephoto end). This mode is not suitable for tilting and panning shots.

Operating modes: CAMERA MEDIA | AUTO M

Dynamic IS or Standard IS

1 Select [Image Stabilizer].
MENU [3 Camera Setup] [Image Stabilizer]

2 Select [Standard] (Standard IS) or [Dynamic] (Dynamic IS) and then select [✕].
- Select [Off] instead to turn off the image stabilization, for example, when the camcorder is mounted on a tripod.
- The icon of the selected mode appears at the top center of the screen.

Powered IS

To use Powered IS, you will first need to set an assignable button to [Powered IS].

1 Set an assignable button to [Powered IS] (85).

2 Press and hold the assignable button as long as you want to activate Powered IS.
- appears in yellow while Powered IS is activated.
- You can change the operation of the assignable button set to [Powered IS] (long press or toggle on/off) with the MENU [Camera Setup] [Powered IS Button] setting.
- Powered IS is available even when [Image Stabilizer] is set to [Off].

NOTES

- If the degree of camcorder shake is too high, the image stabilizer may not be able to fully compensate.
- For surveying and following shots, when you pan the camcorder from side to side or tilt it up and down, we recommend setting [Image Stabilizer] to [Dynamic] or [Standard].
- Powered IS will be deactivated when the camcorder is turned off.
- **About Dynamic IS:**
  - The angle of view will change when [Image Stabilizer] is set to an option other than [Dynamic].
  - When using Dynamic IS, the edges of the picture may be adversely affected (ghosting, artifacts and/or dark areas may appear) when compensating for a high degree of camcorder shake.

Setting the Time Code

The camcorder generates a time code signal and records it with the recorded clips. The time code signal can be output from the SDI OUT terminal (XA45 only) and HDMI OUT terminal.
Depending on the frame rate used, you may be able to select between a drop frame an non-drop frame time code signal (📖 66). Though the time code display style is different for DF and NDF, in this section the NDF display style is used for simplicity's sake.

Operating modes: CAMERA MEDIA | AUTO M

Selecting the Time Code Mode

1 Select [Time Code Mode].
MENU ➤ [2 Recording Setup] ➤ [Time Code Mode]

2 Select the desired option and then select [✕].
- If you selected [REGEN. Regen.], you do not need to perform the following procedures to set the time code running mode or the time code's initial value.

Options

[PRESET Preset]: The time code starts from an initial value you can select in advance. The default initial time code is 00:00:00:00.
See the following procedures to select the time code running mode and set the initial time code.

[REGEN. Regen.]: The camcorder will read the selected SD card and the time code will continue from the last time code recorded on the card. The time code runs only while recording so clips recorded consecutively on the same SD card will have continuous time codes.

Setting the Time Code Running Mode

If you set the time code mode to [PRESET Preset], you can select the time code running mode.

1 Select [Time Code Running Mode].
MENU ➤ [2 Recording Setup] ➤ [Time Code Running Mode]

2 Select the desired option and then select [✕].

Options

[REC RUN Rec Run]: The time code runs only while recording so clips recorded consecutively on the same SD card will have continuous time codes.

[FREE RUN Free Run]: The time code starts running the moment you confirm the selection and keeps running regardless of the camcorder's operation.

Setting the Time Code's Initial Value

If you set the running mode to [PRESET Preset], you can set the initial value of the time code.

1 Select [Initial Time Code].
MENU ➤ [3 Recording Setup] ➤ [Initial Time Code]
- The time code setting screen appears with an orange selection frame indicating the hours.
- Select [Reset] to reset the time code to [00:00:00:00] and return to the previous screen. If the running mode is set to [FREE RUN Free Run], the time code will be reset the moment you select the button and keep running continuously from 00:00:00:00.

2 Select [▲] or [▼] to set the value for the hours and then select the minutes field.
- Change the rest of the fields (minutes, seconds, frame) in the same way.

3 After completing all the fields of the time code, select [OK].
- Select [Cancel] to close the screen without changing the time code.
- If the running mode is set to [FREE RUN Free Run], the time code will start running from the time code entered the moment you select [OK].

4 Select [✕].

NOTES
- When the frame rate is set to 23.98P, the frames value in the time code runs from 0 to 23. For other settings, it runs from 0 to 29.
- However, if MENU ➤ [Display Setup] ➤ [SDI/HDMI Scan Mode] (XA45 only) or [HDMI Scan Mode] (XA40 only) is set to [PsF PsF (Forced 1080i)], even when the frame rate is set to 23.98P, the frames value of the time code output from the SDI OUT terminal (XA45 only) and HDMI OUT terminal will be converted so it runs from 0 to 29.
- You can use the MENU ➤ [Recording Setup] ➤ [HDMI Time Code] setting to turn time code output from the HDMI OUT terminal on or off.
- When slow & fast motion recording is activated, you cannot select the [FREE RUN Free Run] running mode. Conversely, when pre-recording is activated, [FREE RUN Free Run] is set automatically and cannot be changed.
- When slow & fast motion recording is activated, the time code signal cannot be output from the SDI OUT terminal (XA45 only) or HDMI OUT terminal.
- When you are using the [FREE RUN Free Run] running mode, the time code will continue running as long as the built-in backup battery has some charge left, even if you disconnect all other power sources. However, this is less accurate than when the camcorder is on.

Selecting Drop Frame or Non-Drop Frame

You can select between a drop frame (DF) or non-drop frame (NDF) time code, depending on how you plan to use your recordings. However, when the frame rate is set to 23.98P, the time code is set to non-drop frame (NDF) and cannot be changed.

1 Select [DF/NDF].

MENU ➤ [3 Recording Setup] ➤ [DF/NDF]

2 Select [DF DF] or [NDF NDF] and then select [✕].

- The time code display will differ depending on the setting. When you select [DF DF], the time code will appear as [00:00:00.00]; when you select [NDF NDF], it will appear as [00:00:00:00].

NOTES

- When you mix drop frame and non-drop frame time codes, there might be a discontinuity in the time code at the point where the recording starts.

Setting the User Bit

The user bit display can be selected from the date or the time of recording, or an identification code consisting of 8 characters in the hexadecimal system. There are sixteen possible characters: the numbers 0 to 9 and the letters A to F. The user bit will be output from the SDI OUT terminal (XA45 only) and HDMI OUT terminal.

Operating modes: CAMERA MEDIA | AUTO M

1 Open the [User Bit Settings] screen.
MENU ➤ [3 Recording Setup] ➤ [User Bit Type] ➤ [ ]
- To set the time for the user bit, select [TIME Time] instead; to set the date for the user bit, select [DATE Date]. Then, select [✕]. The rest of the procedure is not necessary.
- The user bit setting screen will appear with the orange selection frame on the leftmost digit.
- To reset the user bit to [00 00 00 00], select [Reset].
- Select [Cancel] to close the screen without setting the user bit.

2 Select the digit you want to change and then select [▲] or [▼] to change it as necessary.

3 Select another digit you want to change.

4 Change the rest of the digits in the same way.

5 Select [OK] and then select [✕].

NOTES
- The user bit will not be recorded with clips that are recorded to an SD card.

Recording Audio

The camcorder features 4-channel linear PCM or 2-channel AAC audio recording and playback. The sampling frequency is 48 kHz and the audio sampling bit depth is 16 bit.
You can record audio using the built-in stereo microphone, commercially available external microphone (INPUT 1/INPUT 2 terminals*, MIC terminal) or line input (INPUT 1/INPUT 2 terminals*). Using the INPUT 1/INPUT 2 terminals, you can select the audio input independently for channel 1 (CH1) and channel 2 (CH2).
The audio signal will be output along with the video signal from the SDI OUT terminal (XA45 only) and HDMI OUT terminal. You can record this audio signal on an external recorder.
* Available only when the handle unit is attached to the camcorder.

Operating modes: CAMERA MEDIA | AUTO M

Selecting the Audio Recording Format

You can set the audio recording format to AAC (2 channels, 16 bit) or linear PCM (4 channels, 16 bit). When the resolution is set to 1280x720, the audio format is set to AAC and cannot be changed.

1 Select [MP4 Audio Format].
MENU ➤ [1 Recording Setup] ➤ [MP4 Audio Format]

2 Select the desired option and then select [✕].

Options

[2CH AAC 16bit 2CH]:
The clip is recorded using 2-channel AAC. This format is more versatile and allows the clip to be played back on various devices.

[4CH LPCM 16bit 4CH]:
The clip is recorded using 4-channel linear PCM. This format is uncompressed and offers higher audio quality.

Audio Settings and Recorded Audio Channels

Which audio inputs are recorded to which audio channels is determined by a combination of menu settings, whether the handle unit is attached, and other audio-related controls on the camcorder. The following table gives an overview of the possible combinations.

Audio format	Handle unit connected to the camcorder	Position of the INPUT terminal ON/OFF switch	Microphone connected to the MIC terminal	[CH2 Input][1]	Recorded audio channels/audio sources			
					CH1	CH2	CH3	CH4
[LPCM 16bit 4CH][2]	Yes	ON	Yes	INPUT 2	INPUT 1 terminal	INPUT 2 terminal	MIC terminal (L)	MIC terminal (R)
				INPUT 1		INPUT 1 terminal		
			No	INPUT 2		INPUT 2 terminal	Built-in microphone (L)	Built-in microphone (R)
				INPUT 1		INPUT 1 terminal		
		OFF	Yes	–	MIC terminal (L)	MIC terminal (R)		
			No		Built-in microphone (L)	Built-in microphone (R)		
	No	–	Yes		MIC terminal (L)	MIC terminal (R)		
			No		Built-in microphone (L)	Built-in microphone (R)		
[AAC 16bit 2CH]	Yes	ON	–	INPUT 2	INPUT 1 terminal	INPUT 2 terminal	–	–
				INPUT 1		INPUT 1 terminal		
		OFF	Yes	–	MIC terminal (L)	MIC terminal (R)		
			No		Built-in microphone (L)	Built-in microphone (R)		
	No	–	Yes	–	MIC terminal (L)	MIC terminal (R)		
			No		Built-in microphone (L)	Built-in microphone (R)		

[1] [♪)) Audio Setup] ➤ [CH2 Input].
[2] Not available when the resolution is 1280x720.

Connecting an External Microphone or External Audio Input Source to the Camcorder

To each of the INPUT terminals you can attach commercially available microphones or analog line-in sources with an XLR connector. To use the INPUT terminals and microphone holder, the handle unit must be correctly attached to the camcorder. To the MIC terminal you can attach commercially available condenser microphones with their own power supply, and a ∅ 3.5 mm stereo mini plug. Follow the procedure below to attach a microphone (refer also to the following illustration). To connect an external device to the camcorder, plug the device's cable into the desired INPUT terminal (④).

1 Loosen the microphone lock screw (①), open the microphone holder and insert the microphone (②).
2 Tighten the lock screw and put the microphone cable through the microphone cable clamp under the microphone holder (③).
3 Plug the microphone or external device's cable into the desired INPUT terminal (④) or the MIC terminal (⑤).

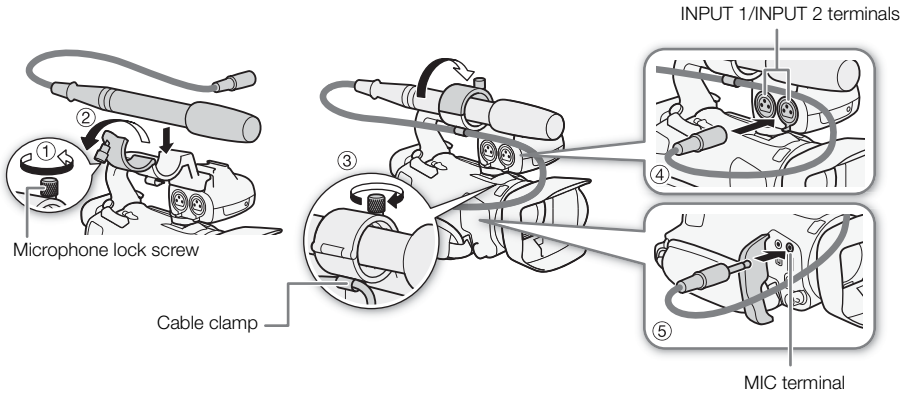

Using Line Input or an External Microphone Connected to an INPUT Terminal

1 Set the INPUT terminal ON/OFF switch to ON.

2 Set the sensitivity selection switches for INPUT 1/ INPUT 2 to LINE or MIC.

- To supply a microphone with phantom power, set the switch to MIC+48V instead. Make sure to connect the microphone first, before turning the phantom power on. Keep the microphone connected when turning off the phantom power.

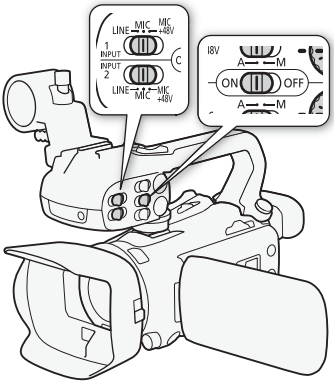

To record the same audio input to two audio channels

By default, when using the INPUT terminals, each audio input is recorded to a separate audio channel (INPUT 1 to CH1 and INPUT 2 to CH2). If necessary (for example, as an audio backup recording), you can record the audio input into the INPUT 1 terminal to both audio channels, CH1 and CH2. In that case, you can adjust the audio recording levels of each channel independently of each other.

1 Select [CH2 Input].

MENU ➤ [♪)) 1 Audio Setup] ➤ [CH2 Input]

2 Select the desired option and then select [✕].

Options

[INPUT2 INPUT 2]: Records audio to each channel separately. Audio input into INPUT 1 is recorded to CH1, while audio input into INPUT 2 is recorded to CH2.

[INPUT1 INPUT 1]: Audio input into INPUT 1 is recorded to both channels. Audio input into INPUT 2 will not be recorded.

NOTES

- Even if you select [INPUT1 INPUT 1], the audio recording level for channel 2 will be determined by the audio level switch and dial for INPUT 2.

Audio Recording Level (INPUT Terminals)

You can set the audio recording level to automatic or manual independently for each channel. Furthermore, when you adjust the audio recording level manually, you can set the level (from –∞ to 18 dB) independently for each channel, as well.

1 Set the audio level switch of the desired channel to A (automatic) or M (manual).
   - If you set the switch to A, the audio level will be adjusted automatically and you do not need to perform the rest of the procedure. If you set the switch to M, continue the procedure to set the audio recording level.

2 Turn the corresponding audio level dial.
   - For reference, MIN corresponds to –∞, the larger mark in the middle of the scale corresponds to 0 dB, and MAX corresponds to +18 dB.
   - As a guideline, adjust the audio recording level so that the audio level meter will go to the right of the –18 dB mark (one mark right of the –20 dB mark) only occasionally.

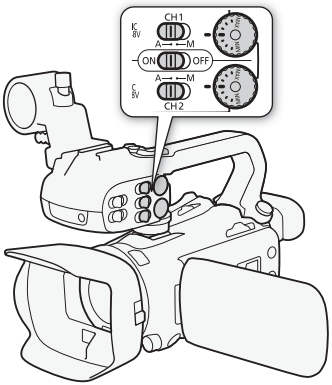

Automatic Level Control (ALC) for CH1 and CH2 of the INPUT terminals

When the INPUT 1 and INPUT 2 switches are both set to the same type of audio source (line input or microphone), you can link the audio level adjustment for both inputs with the **MENU** ➤ [♪ Audio Setup] ➤ [INPUT 1/2 ALC Link] setting.
When the [LINK Linked] option is selected, you can adjust both audio channels with the CH1 audio level switch and CH1 audio level dial.

NOTES

- When the audio level meter reaches the red point (0 dB), the sound may be distorted.
- If the audio level meter display is normal but the sound is distorted, activate the microphone's attenuator (📖 73).
- We recommend using headphones to check the sound level while adjusting the audio recording level or when the microphone attenuator is activated.
- If at least one of the channels is set to manual adjustment, you can activate the audio peak limiter with the **MENU** ➤ [♪ Audio Setup] ➤ [INPUT 1/2 Limiter] setting. When activated, LIM appears on the screen and the audio peak limiter will limit the amplitude of audio input signals when those signals start to distort.

Adjusting the Microphone's Sensitivity (INPUT terminals)

When one of the audio channels is set to the INPUT terminals and the corresponding sensitivity selection switch is set to MIC or MIC+48V, you can select the external microphone's sensitivity.

1 Select the desired INPUT terminal's sensitivity.
   MENU ➤ [♪ 1 Audio Setup] ➤ [INPUT 1 Mic Trimming] or [INPUT 2 Mic Trimming]

2 Select the desired option and then select [✕].
   - You can select one of 5 sensitivity levels from –12 dB to +12 dB.

Microphone Attenuator (INPUT terminals)

When one of the audio channels is set to the INPUT terminals and the corresponding sensitivity selection switch is set to MIC or MIC+48V, you can activate the external microphone's attenuator (20 dB).

1 Select the desired INPUT terminal's sensitivity.
MENU ➤ [♪)) 1 Audio Setup] ➤ [INPUT 1 Mic Att.] or [INPUT 2 Mic Att.]

2 Select [ON On] and then select [✕].
- ATT appears at the right of the screen.

Using the Built-in Microphone or an External Microphone Connected to the MIC Terminal

If the handle unit is attached to the camcorder but you will not connect an external microphone to an INPUT terminal, follow the step below to use the built-in microphone or an external microphone connected to the MIC terminal. When an external microphone is connected to the MIC terminal, the camcorder will switch automatically from the built-in microphone to the external one.

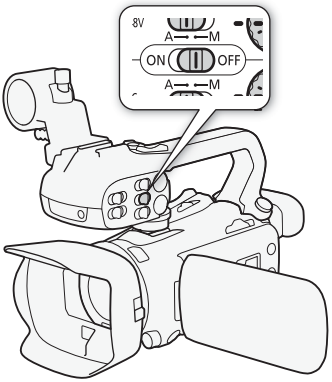

Set the INPUT terminal ON/OFF switch to OFF.

- If you connect a microphone to the MIC terminal, the camcorder will switch automatically from the built-in microphone to the external microphone.

To use a commercially available plug-in power microphone

1 Select [MIC Power].
MENU ➤ [♪)) 3 Audio Setup] ➤ [MIC Power]

2 Select [ON On] and then select [✕].

IMPORTANT
- Supplying power to a microphone without plug-in power functionality may damage the microphone.

Adjusting the L and R channels of the MIC terminal independently
You can use the MENU ➤ [♪)) Audio Setup] ➤ [MIC ALC Link] setting to separate the audio level adjustment for the L and R channels of an external microphone connected to the MIC terminal, allowing each channel to be adjusted independently.

Audio Recording Level (Built-in Microphone/MIC Terminal)

You can adjust the audio recording level of the built-in microphone or an external microphone connected to the MIC terminal.

1 Open the audio screen.
[FUNC] ➤ [♪) Audio]

2 Select [CH1/2] or [CH3/4] as necessary, to change the pair of audio channels you wish to adjust.
- When MENU ➤ [♪) Audio Setup] ➤ [MIC ALC Link] is set to [SEP. Separated], select the audio channel to adjust and repeat steps 2 to 4 for the other audio channel if necessary.

3 Select [🎙A Automatic] or [🎙M Manual].
- If you selected automatic adjustment, skip to step 5. If you selected manual adjustment, continue the procedure to adjust the audio recording level.

4 Touch and hold [◀] or [▶] to adjust the recording level as necessary.
- As a guideline, adjust the audio recording level so that the audio level meter on the screen will go to the right of the –18 dB mark (one mark right of the –20 dB mark) only occasionally.

5 Select [✕].

NOTES
- When the audio level meter reaches the red point (0 dB), the sound may be distorted.
- If the audio level meter display is normal but the sound is distorted, activate the microphone's attenuator (📖 73).
- We recommend using headphones to check the sound level while adjusting the audio recording level or when the microphone attenuator is activated.

Microphone Sensitivity (Built-in Microphone)

You can increase the built-in microphone's sensitivity.

1 Select [Built-in Mic Sensitivity].
MENU ➤ [♪) 2 Audio Setup] ➤ [Built-in Mic Sensitivity]

2 Select the desired option and then select [✕].

Options

[NORM Normal]:	For recording audio under usual conditions.
[HIGH High]:	For recording audio at a higher level (+6 db).

Microphone Attenuator (Built-in Microphone or MIC Terminal)

If the audio level is too high and the audio sounds distorted while recording with the built-in microphone or external microphone (MIC terminal), activate the microphone attenuator (20 dB) for the respective microphone.

1 Select [Built-in Mic Att.] or [MIC Att.].
MENU ➤ [♪)) 1 Audio Setup] ➤ [Built-in Mic Att.] or [MIC Att.]

2 Select the desired option and then select [✕].

Options

[A Automatic]:	The camcorder will automatically activate the microphone attenuator as necessary for optimal audio recording levels so high audio levels will not be distorted.
[ON On]:	The microphone attenuator will be activated at all times to reproduce more faithfully the sound dynamics. ATT will appear on the screen.
[OFF Off]:	The microphone attenuator will be deactivated at all times. A OFF will appear on the screen.

Low-Cut Filter (Built-in Microphone or MIC Terminal)

You can activate the low cut filter to reduce the sound of blowing wind, a car's engine and similar ambient sounds. When recording in surroundings unaffected by wind or if you want to record low-frequency sounds, we recommend turning off the low-cut filter.

1 Select [Built-in Mic Low Cut] or [MIC Low Cut].
MENU ➤ [♪)) 1 Audio Setup] ➤ [Built-in Mic Low Cut] or [MIC Low Cut]

2 Select [ON On] and then select [✕].

Using Headphones

Use headphones for playback or to check the audio level while recording. The following procedure explains how to adjust the volume.

Operating modes: CAMERA MEDIA | AUTO M

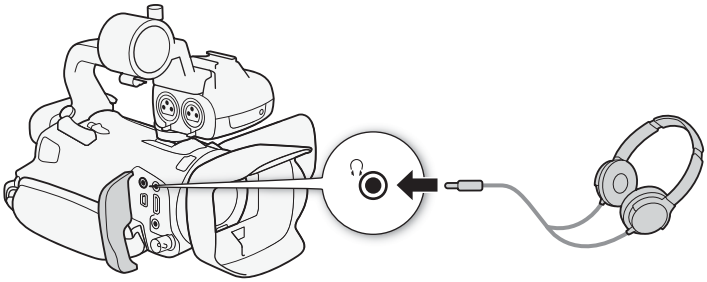

1 Select [Headphone Volume].
MENU ➤ [♪)) 3 Audio Setup] ➤ [Headphone Volume]

2 Select [🎧)] or [🎧))] to adjust the volume and then select [✕].
- You can also drag your finger along the volume bar.

To adjust the volume during playback

During playback, adjust the headphones volume the same way you adjust the speaker's volume (📖 91).

IMPORTANT

- When using headphones, make sure to lower the volume to an appropriate level.

NOTES

- Use commercially available headphones with a ∅ 3.5 mm minijack.

Color Bars/Audio Reference Signal

You can have the camcorder output and record color bars and a 1 kHz audio reference signal and output them from the HDMI OUT terminal, SDI OUT terminal (XA45 only) and 🎧 (headphone) terminal (audio reference signal only).

Operating modes: CAMERA MEDIA | AUTO M

Recording Color Bars

You can choose between SMPTE and ARIB color bars.

1 Select [Color Bars].
MENU ➤ [3 Recording Setup] ➤ [Color Bars]

2 Select the desired option and then select [✕].
- The selected color bars appear on the screen and will be recorded when you press the START/STOP button.

NOTES
- This function cannot be used together with slow & fast motion recording.

Recording an Audio Reference Signal

The camcorder can output a 1 kHz audio reference signal with the color bars.

1 Select [1 kHz Tone].
MENU ➤ [3 Recording Setup] ➤ [1 kHz Tone]

2 Select the desired option and then select [✕].
- You can select one of three audio levels (–12 dB, –18 dB, –20 dB) or select [OFF Off] to turn off the signal.
- The signal is output at the selected level and will be recorded when you press the START/STOP button.

Pre-Recording

When pre-recording is activated, the camcorder starts recording continuously into a temporary memory (approx. 3 seconds) so when you press the START/STOP button, the clip will contain also a few seconds of video and audio recorded before you pressed the button.

Operating modes: CAMERA MEDIA | AUTO M

1 Press the PRE REC button.
- Pre-recording is activated and appears at the top of the screen.
- Press the button again to turn off pre-recording.

2 Press the START/STOP button.
- The clip recorded on the card will include a few seconds of video and audio recorded before the START/STOP button was pressed.

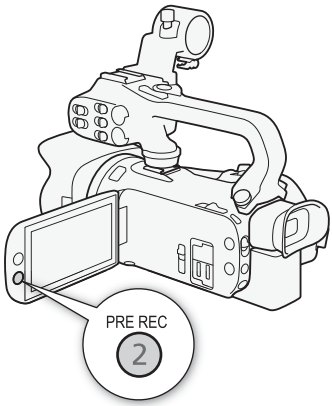

NOTES

- The camcorder will not record the full 3 seconds prior to pressing the START/STOP button if the button was pressed within 3 seconds of having turned on pre-recording or having finished the previous recording.
- This function cannot be used together with slow & fast motion recording.
- Pre-recording will be deactivated in the following cases:
  - When the power switch or camera mode switch is operated.
  - When a menu is opened.
  - When the shooting mode, white balance or look is changed.
  - When the SD card compartment cover is opened or the SD card being recorded to becomes full.
- About the time code when pre-recording is activated:
  - The time code of the clip will start a few seconds before the START/STOP button was pressed.
  - If the time code mode was set to [REGEN. Regen.], or to [PRESET Preset] with [REC RUN Rec Run] running mode, the time code running mode will be changed automatically to [FREE RUN Free Run] when pre-recording is activated.
  - When pre-recording is turned off, the time code running mode will return to its previous setting.

Onscreen Displays

You can turn most onscreen displays on or off.

Operating modes: CAMERA MEDIA | AUTO M

Repeatedly press the DISP button to turn the onscreen displays on/off in the following sequence:

CAMERA mode:

- All displays on
- Onscreen markers[1]
- Displays off

MEDIA mode[2]:

- Only data code on
- All displays on

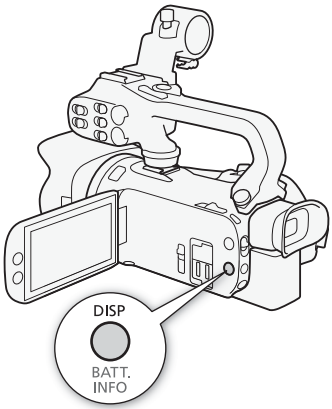

[1] The onscreen markers will be displayed only when MENU ➤ [Display Setup] ➤ [Onscreen Markers] is set to an option other than [OFF Off].

[2] Pressing the DISP button has the same effect as touching the screen. During single photo view and while playing back a clip, the playback controls are displayed only momentarily.

Infrared Recording

Using the infrared mode, the camcorder becomes more sensitive to infrared light, allowing you to record in dark locations. You can also use the handle unit's infrared light to keep shooting even in very dark conditions. Also, you can select whether the brighter areas of the picture appear in green or white.

Operating modes: CAMERA MEDIA | AUTO M

1 Set the INFRARED switch to ON.
- IR and OFF appear at the top left of the screen.

2 To change the color of highlights in the infrared picture, select [IR Rec Color].
MENU ➤ [5 Camera Setup] ➤ [IR Rec Color]

3 Select [WHITE White] or [GREEN Green] and then select [✕].

4 To turn on the infrared light, select [IR Light].
MENU ➤ [4 Camera Setup] ➤ [IR Light]

5 Select [ON On] and then select [✕].
- OFF changes to ON.

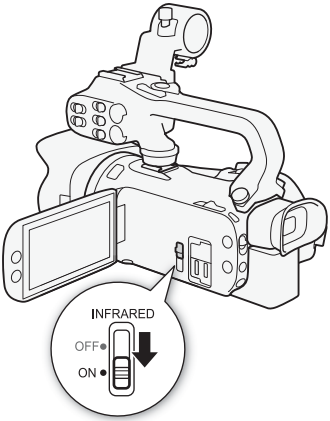

NOTES

- While infrared mode is activated, the following apply.
  - The aperture remains fully open and the ND filter remains retracted. Additionally, the camcorder switches to automatic shutter speed and gain.
  - Exposure adjustment, AGC limit, backlight correction (both automatic and constant) and face detection & tracking are deactivated.
  - The camcorder switches to autofocus initially but you can change the focus mode to manual focus. The focusing distance display is grayed out.
  - The white balance switches to a setting for infrared mode.
  - The shooting mode and looks cannot be set.
- Depending on the light source, autofocus may not work well while zooming.
- In infrared mode the camcorder's sensor is considerably more sensitive to near-infrared light. Do not point the lens at strong light or heat sources when infrared recording is activated. If there are such light/heat sources in the picture, be sure to shield the lens before switching the camcorder to infrared mode.
- If you set an assignable button to [IR Light] (📖 85), you can press the button to turn the infrared light on/off.

Using the Optional RC-V100 Remote Controller

You can connect the optional RC-V100 Remote Controller to the camcorder's REMOTE terminal in order to control the camcorder (including advanced recording functions) from a distance. The remote controller lets you turn the camcorder on, navigate the menus and remotely control the aperture and shutter speed, and more.
Use the cable supplied with the remote controller to connect it to the camcorder. For details on how to connect and use the remote controller, refer to its instruction manual.

Operating modes: CAMERA MEDIA | AUTO M

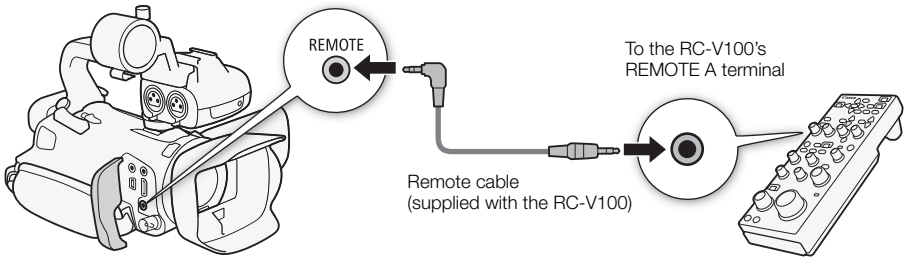

1 Turn off the camcorder and connect the optional RC-V100 Remote Controller to the camcorder.

2 Turn on the camcorder in CAMERA mode and select [REMOTE Terminal].
MENU ➤ [2 System Setup] ➤ [REMOTE Terminal]

3 Select [RC-V100 RC-V100 (REMOTE A)] and then select [✕].

Options

[RC-V100 RC-V100 (REMOTE A)]: Select this option to use the optional RC-V100 Remote Controller.

[Std. Standard]: Select this option to use commercially available remote controls.

NOTES

- The following controls on the remote controller will not operate the camcorder:
  - CANCEL button
  - ND button
  - AGC button
  - AUTO KNEE button
  - BLACK GAMMA LEVEL dial
  - WHITE BALANCE R and B dials
  - MASTER PEDESTAL dial
  - AUTO IRIS button
  - SHUTTER SELECT button
  - CUSTOM PICT. button
  - KNEE POINT, KNEE SLOPE dials
  - SHARPNESS LEVEL dial
  - MASTER BLACK R and B dials

Using the GP-E2 GPS Receiver

When the optional GP-E2 GPS Receiver is connected to the camcorder's USB terminal, the camcorder will automatically record the GPS information (longitude, latitude and altitude) and the UTC (coordinated universal time) date and time to every recording you make (clips and photos). The recorded GPS information can be checked on the clip information screen or photo playback screen (single photo view).

Operating modes: CAMERA MEDIA | AUTO M

Connecting the GPS Receiver

Turn off the camcorder and the receiver. Connect the receiver to the camcorder's USB terminal using the USB cable*. While recording, place the receiver in the carrying case* and attach it to the camcorder's grip belt or carry it on your person. For details about connecting and using the receiver, refer to the GP-E2 Instruction Manual.

* Supplied with the optional GP-E2 GPS Receiver.

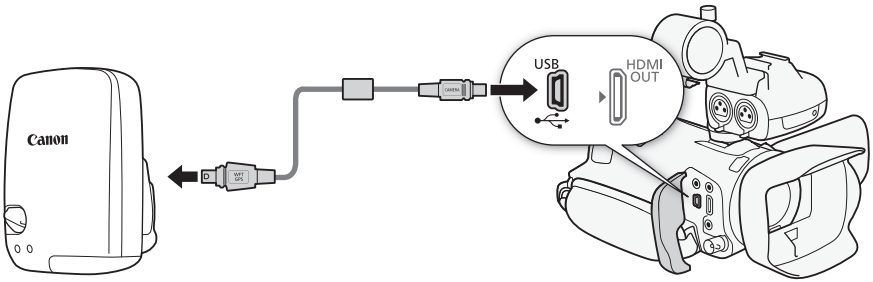

Activating the GPS Receiver

Turn on the camcorder and receiver.

- The icon appears on the left of the screen and will blink as the receiver tries to acquire satellite signals.
- When satellite signals are correctly acquired, the icon will stay continuously on. GPS functions will be activated, and clips and photos recorded thereafter will be geotagged.

To adjust the date and time automatically according to the GPS data

You can set MENU [System Setup] [GPS Auto Time Setting] to [ON Auto Update], to have the camcorder automatically adjust its date and time settings according to the information received from the GPS signal. The date and time will be updated automatically the first time a correct GPS signal is acquired after turning on the camcorder.

- While the automatic date/time adjustment is activated, the MENU [System Setup] [Date/Time] setting will not be available.
- The time will not be updated while recording.

IMPORTANT

- In certain countries/regions, the use of GPS may be restricted. Be sure to use the GPS receiver in accordance with local laws and regulations of the country/region where the receiver is used. Be particularly careful when traveling outside of your home country.
- Be careful about using the GPS receiver in places where the use of electronic devices is restricted.
- The GPS information recorded with clips and photos may contain data that can lead others to locate or identify you. Be careful when sharing geotagged recordings with others or when uploading them to the Web.
- Do not leave the GPS receiver near strong electromagnetic fields such as near powerful magnets and motors.

NOTES

- The GPS information recorded with clips corresponds to the location at the start of the recording.
- Do not place cables connected to the SDI OUT terminal (XA45 only) or HDMI OUT terminal near the receiver. Doing so may negatively affect the GPS signal.
- Initial GPS signal reception will take longer after replacing the receiver’s battery or when first turning on the receiver after a prolonged period of having been turned off.
- The camcorder is not compatible with the receiver's digital compass and positioning interval functions. Also, the [Set Now] option is not available for the [GPS Auto Time Setting] setting.

4 Customization

CUSTOM Dial and Button

You can assign to the CUSTOM button and dial one of several frequently used functions. You can then adjust the selected function using the CUSTOM button and dial, without having to access the menu.

Operating modes: CAMERA MEDIA | AUTO M

1 Select [CUSTOM Dial & Button].
MENU ➤ [3 System Setup] ➤ [CUSTOM Dial & Button]

2 Select the desired option and then select [✕].

3 Press the CUSTOM button and turn the CUSTOM dial to use the assigned function as described in the following explanations.
- The onscreen value that can be adjusted using the CUSTOM dial will be highlighted in orange.

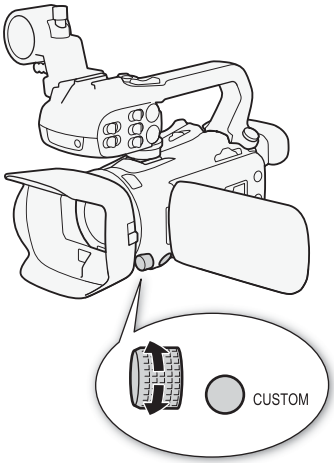

Options

[Tv/Av/M Tv/Av/M]: When the shooting mode is set to Tv or Av, turn the CUSTOM dial to adjust the shutter speed or aperture value, respectively.
When the shooting mode is set to M, press the CUSTOM button repeatedly to select the value you wish to adjust (aperture value → shutter speed → gain value). While the desired value is highlighted in orange, turn the dial to adjust it.

[GAIN AGC Limit]: Press the CUSTOM button to turn the AGC limit on/off. When the AGC limit is activated, turn the dial to set the maximum gain value.

[Exposure Comp.]: Press the CUSTOM button to lock the exposure. Whether the exposure is locked or not, you can turn the dial to compensate the exposure.

[OFF Off]: Disables the CUSTOM button and dial.

NOTES

- Instead of the procedure above, you can press and hold the CUSTOM button to display a quick menu of the options. Use the CUSTOM dial to select the desired option and then press the CUSTOM button.

Assignable Buttons

The camcorder offers 5 assignable buttons on the camcorder's body and an onscreen button (touch operation) to which you can assign various functions (assignable buttons). Assign often-used functions to the buttons you find most convenient, to personalize the camcorder to your needs and preferences. The names of the buttons printed on the camcorder also indicate their default settings. The onscreen assignable button will show only the icon of the function currently assigned to it.
Assigned functions can be changed only in CAMERA mode. In MEDIA mode, only a button with [CH/CH Monitor Channels] or [MENU Menu] assigned to it can be used.

Operating modes: CAMERA MEDIA | AUTO M

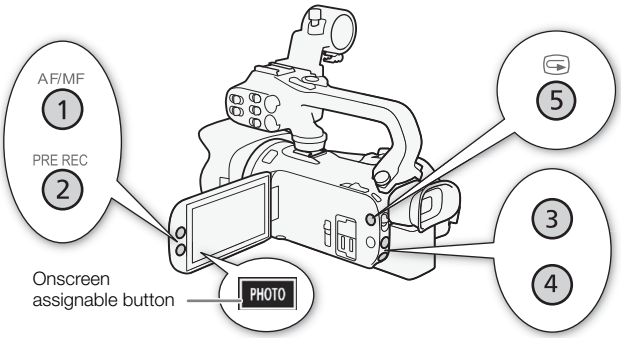

1 Physical buttons: Press the MENU button and, while holding it pressed down, press the assignable button whose function you wish to change.
Onscreen assignable button: Open the function selection screen with the menu setting.
MENU ➤ [3 System Setup] ➤ [Onscreen Assignable Button]
- A list of available functions appears with the current function assigned to the button highlighted.
- You can use the menu also for physical assignable buttons. The corresponding settings ([Assignable Button 1] to [Assignable Button 5]) can be found under page 2 in the [System Setup] menu.

2 Select the desired function and then select [✕].
- If necessary, select [▲]/[▼] to scroll up/down.

3 Press the assignable button (or touch the onscreen assignable button) to use the assigned function as described in the following table.

Assignable functions

Function name	Description	📖
[AF/MF AF/MF]	Switches between autofocus and manual focus.	57
[Face Only AF]	Switches between standard autofocus and autofocus only when a face is detected.	62
[MAGN. Magnification]	Turns magnification on/off.	59
[BLC Always On]	Turns the constant backlight correction function on/off.	47
[Powered IS]	Turns powered IS on/off.	63
[Set WB]	Registers a custom white balance setting. This is not available for the onscreen assignable button.	49
[WB WB Priority]	Switches between the current white balance setting and a priority white balance setting registered with the MENU ➤ [Camera Setup] ➤ [Set WB Priority] setting.	103
[IR Light]*	When infrared recording is activated, turns the camcorder's infrared light on/off.	80
[Pre REC]	Turns pre-recording on/off.	78
[REC REVIEW Rec Review]	Reviews the last clip recorded.	36
[PHOTO Photo]	Records a photo.	34
[CH/CH Monitor Channels]	Changes the audio channels output from the 🎧 (headphone) terminal.	99
[MENU Menu]	Displays/Hides the menu.	102
[OFF Off]	No function assigned – the button is disabled.	—

* Requires that the handle unit be correctly attached to the camcorder.

Saving and Loading Menu Settings

After you adjust settings in the various menus, you can save those settings on an SD card. You can load those settings at a later date or on another XA45 / XA40 camcorder so that you can use that camcorder in a similar way.
Camcorder settings can only be saved on or loaded from the SD card in card slot B.

Operating modes: CAMERA MEDIA | AUTO M

Saving Camcorder Settings

1 Insert the SD card where you want to save the camcorder's settings into SD card slot B.

2 Select [Save].
MENU ➤ [3 System Setup] ➤ [Backup Menu Settings B] ➤ [Save]

3 Select [Yes].
- The camcorder's menu settings will be saved to the card. If menu settings were previously saved, the old file will be overwritten by the current menu settings.

4 When the confirmation message appears, select [OK].

Loading Camcorder Settings

1 Insert an SD card that contains previously saved camcorder settings into SD card slot B.

2 Select [Load].
MENU ➤ [3 System Setup] ➤ [Backup Menu Settings B] ➤ [Load]

3 Select [Yes].
- The camcorder's menu settings will be replaced by the settings saved on the card. Then, the screen will turn black momentarily and the camcorder will restart.

5 Playback

Basic Playback

This section explains how to play back clips and photos. For details on playing back recordings using an external monitor, refer to *Connecting to an External Monitor* (96).

Operating modes: CAMERA MEDIA | AUTO M

1 Set the power switch to MEDIA.
- The camcorder switches to MEDIA mode and the clip index screen appears.

2 Look for the clip or photo you wish to play back.
- Swipe left/right or select [◀]/[▶] to check other index pages.
- To view photos or play back recordings on the other SD card, change the index screen.

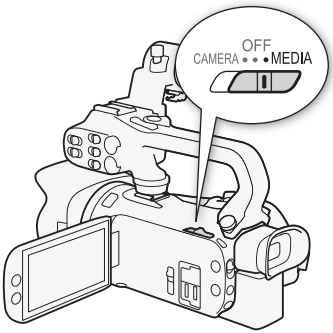

1 : Clip index screen
: Photo index screen.
2 Display the next/previous index page. You can also swipe left/right on the screen.
3 Index screen button: Select to change the index screen. Select the desired combination of card (A or B) and type of recording (MP4 clips or photos) you want to play back.
4 [FUNC] button: Clip/photo operations (92).
5 Folder name. The last 4 digits indicate the recording date (1025 = October 25) (107).
6 Clips only: Clip information (91).

3 In the index screen, select the thumbnail of the desired recording.
- **Clips**: Playback will start from the selected clip until the last clip in the index screen.
  Photos: The selected photo will be displayed. Swipe left/right to view other photos.

4 Touch the screen to display the playback controls.

- During video or photo playback, the playback controls will disappear automatically after a few seconds. In video playback pause, touch the screen again to hide the playback controls.
- For details on the playback controls, refer to *Playback Controls* (📖 90).

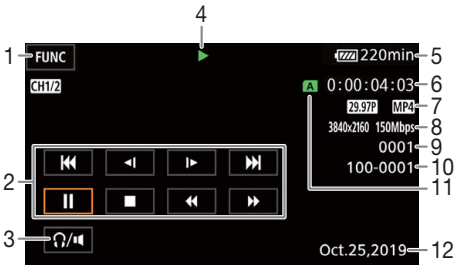

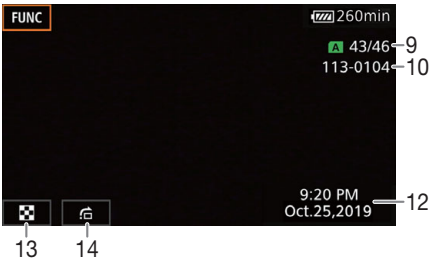

1 [FUNC] button: Clip/photo operations (📖 92)
2 Clip playback controls (📖 90)
3 Volume (📖 91)
4 Clip playback operation (📖 90)
5 Remaining battery charge (📖 113)
6 Time code (📖 64)
7 Frame rate (📖 37) and movie format
8 Resolution and bit rate (📖 37)
9 Clips: Clip number
Photos: Photo number / Total number of photos
10 File number (📖 107)
11 SD card selected for playback (📖 88)
12 Data code (📖 105)
13 Return the photo index screen
14 Photo jump (📖 90)

IMPORTANT

- You may not be able to play back with this camcorder clips recorded on an SD card using another device.

NOTES

- The following image files may not be displayed correctly.
  - Images not recorded with this camcorder.
  - Images edited on a computer.
  - Images whose file names have been changed.
- You can turn off the recording date and time display or change the information displayed with the **MENU** ➤ [▶ Playback Setup] ➤ [Data Code] setting. Note that available options depend on the type of recording.
- Depending on the recording conditions, you may notice brief stops in video or sound playback between clips.

Playback Controls

The following playback types are available using the onscreen controls. Using the joystick, push the joystick to select the desired button and then press the joystick.

Clip playback controls

Playback type	Operation	Onscreen icon
Fast playback*	During playback, select [◀◀] / [▶▶]. • Select repeatedly to increase the playback speed to approximately 5x → 15x → 60x the normal speed. • During fast playback, select [▶] to return to playback at normal speed.	x00 ▶▶ ◀◀ x00
Slow playback*	Select [◀▌] / [▌▶]. • Touch repeatedly to change the playback speed to approximately 1/4 → 1/8 the normal speed.	x1/0 ▌▶ ◀▌ x1/0
Frame reverse/advance*	During playback pause, select [◀▌▌] / [▌▌▶].	◀▌▌ ▌▌▶
Skip to the beginning of the current clip	Select [▌◀◀].	—
Skip to the beginning of the previous clip	Select [▌◀◀] twice.	—
Skip to the beginning of the next clip	Select [▶▶▌].	—
Pause/resume playback	During playback, select [▌▌] to pause. During playback pause, select to [▶] to resume normal playback.	▌▌ ▶
Stop playback	Select [■] to stop playback and return to the index screen.	—

* There is no audio during this playback mode.

Photo playback controls

Playback type	Operation
Return to the photo index screen	Select [▦].
Photo jump	Select [⌂] to display the scroll bar. Select [◀] / [▶], or drag your finger along the scroll bar, to find the desired photo. Select [↩] to return to single photo view.

NOTES

- During fast/slow playback, you may notice some anomalies (blocky video artifacts, banding, etc.) in the playback picture.
- The speed indicated on the screen is approximate.
- Slow reverse playback will look the same as continuous frame reverse.

Adjusting the Volume

During playback, audio will be output from the monaural built-in speaker. You can connect a pair of headphones to the (headphone) terminal to listen to the audio in stereo.

1 During playback, touch the screen to display the playback controls.

2 Select [/].

3 Select []/[] or []/[] to adjust the volume and then select [].

- You can also drag your finger along the respective volume bar.

Displaying Clip Information

1 In the clip index screen select [i] and then select the desired clip.

- The [Clip Info] screen will be displayed.
- Select [◀] / [▶] to view the information for the previous/next clip.

2 Select [] twice to return to the index screen.

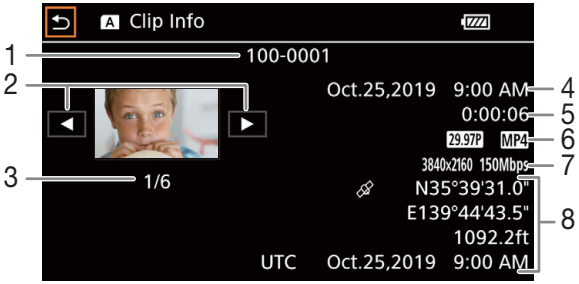

1 File number (107)
2 Display the information for the previous/next clip
3 Clip number / Total number of clips
4 Date and time at the start of recording
5 Clip duration
6 Frame rate (37) and movie format
7 Resolution and bit rate (37)
8 GPS information* (82) (location at the start of recording)

* Only when the optional GP-E2 GPS Receiver was used when recording the clip.

Clip and Photo Operations

Deleting Clips and Photos

You can delete clips and photos you are not interested in keeping.

Operating modes: CAMERA MEDIA | AUTO M

Deleting Clips and Photos from the Index Screen

1 Open the desired index screen (📖 88).
- Drag your finger left/right until a clip or photo you want to delete appears.

2 Select [Delete].
[FUNC] ➤ [Delete]

3 Select the desired option and then select [Yes].
- When you select [Select], perform the following procedure to select the individual recordings you want to delete before selecting [Yes].
- Select [Stop] to interrupt the operation while it is in progress. Some recordings may be deleted nevertheless.

4 When the confirmation message appears, select [OK].

To select individual recordings

1 Select the individual clips/photos you want to delete.
- A checkmark ✓ will appear on the recordings you select. The total number of selected clips/photos will appear next to the ☑ icon.
- Select a selected clip or photo to remove the checkmark. To remove all checkmarks at once, select [Remove All] ➤ [Yes].

2 After selecting all the desired recordings, select [OK].

Options

<folder name>: Deletes all the clips or photos recorded on a particular date. The last 4 digits of the folder name in the button indicate the recording date (1025 = October 25).

[Select]: You can select the individual clips or photos you want to delete.

[All Clips], [All Photos]: Deletes all the clips or photos.

Deleting a Clip during Playback

1 Play back the desired clip (📖 88).

2 Touch the screen to display the playback controls and then delete the clip.
[❚❚] ➤ [FUNC] ➤ [Delete] ➤ [Yes]

3 When the confirmation message appears, select [OK].

Deleting a Photo during Playback

1 Play back the desired photo (📖 88).
2 Touch the screen to display the playback controls and then delete the photo.
[FUNC] ➤ [Delete] ➤ [🗑 Proceed] ➤ [Yes]
3 Drag your finger left/right to select another photo to delete or select [✕].

IMPORTANT

- **Be careful when deleting recordings. Once deleted, they cannot be recovered.**
- Save copies of important recordings before deleting them (📖 100).

NOTES

- Photos that were protected with other devices cannot be deleted with this camcorder.
- To delete all recordings and make all recordable space available again you may prefer to initialize the SD card (📖 32).

Trimming Clips

You can trim clips by removing everything up to a certain point or everything after a certain point.

Operating modes: CAMERA MEDIA | AUTO M

1 Play back the desired clip (📖 88).
2 Touch the screen to display the playback controls and then open the trimming screen.
[❚❚] ➤ [FUNC] ➤ [Trim]
3 Bring the clip to a precise point, if necessary.
- The point at which the clip will be trimmed is indicated by the ▼ marker.
- Playback controls will appear on the screen (📖 90). Use any special playback modes as necessary to locate the desired point.

4 Select the desired trimming options and trim the clip.
[Trim] ➤ [Trim Before Marker] or [Trim After Marker] ➤ [Save as New] or [Overwrite]
- With the first set of options you can select, respectively, to trim before or after the ▼ mark. With the second set of options you can select, respectively, to save the trimmed clip as a new clip or to overwrite the existing clip.
- If you selected [Save as New], you can select [Stop] and then [OK] to interrupt the operation while it is in progress.

NOTES

- In the index screen, clips trimmed with the [Trim Before Marker] option appear with a special playback icon instead of the usual thumbnail.
- In the trimming screen, the frame reverse/advance button will jump in 1-frame intervals. The positions where trimming is possible are 1 GOP (approx. 0.5 second) apart.
- The clip is trimmed at the start/end of the GOP that includes the frame indicated with the marker.

6 External Connections

Video Output Configuration

The video signal output from the SDI OUT terminal (XA45 only) and HDMI™ OUT terminal depends on the clip's video configuration and on various menu settings. The video signal output from the HDMI OUT terminal can also change depending on the capabilities of the connected monitor.

XA45 The camcorder cannot output signals to the SDI OUT terminal and HDMI OUT terminal simultaneously.

Operating modes: CAMERA MEDIA | AUTO M

Video Output Configuration (Recording)

Recording video configuration		Scan mode setting[1]	Maximum resolution setting[2]	Video output configuration		
Resolution	Frame rate			Resolution	Frame rate	Color sampling
3840x2160	29.97P 23.98P	P	1920x1080	1920x1080	Same as that for video configuration[3]	YCbCr 4:2:2 8 bit
			1280x720 (59.94P)	1280x720	59.94P	
		PsF	—	1920x1080	SDI output[4]: 29.97PsF (59.94i) HDMI output: 59.94i	
1920x1080	59.94P 29.97P 23.98P	P	1920x1080	1920x1080 720x480[5]	Same as that for video configuration[3]	YCbCr 4:2:2 10 bit
			1280x720 (59.94P)	1280x720	59.94P	
		PsF	—	1920x1080	SDI output[4]: 29.97PsF (59.94i) HDMI output: 59.94i	
1280x720	59.94P	—	—	1280x720	59.94P	

[1] MENU ➤ [Display Setup] ➤ [SDI/HDMI Scan Mode] (XA45) or [HDMI Scan Mode] (XA40) setting.
[2] For HDMI output: MENU ➤ [Display Setup] ➤ [HDMI Max Resolution] setting.
XA45 For SDI output: MENU ➤ [Display Setup] ➤ [SDI Output] setting.
[3] The frame rate is 59.97P during slow & fast motion recording.
[4] XA45 only.
[5] HDMI output only. Only when the frame rate is set to 59.97P. Automatically selected depending on the capabilities of the connected monitor.

Video Output Configuration (Playback)

Video configuration of the clip		Scan mode setting[1]	Maximum resolution setting[2]	Video output configuration		
Resolution	Frame rate			Resolution	Frame rate	Color sampling
3840x2160	29.97P 23.98P	P	3840x2160	3840x2160[3]	Same as that for video configuration[3]	YCbCr 4:2:2 8 bit[5]
			1920x1080	1920x1080[3]	Same as that for video configuration[3]	
			1280x720 (59.94P)	1280x720	59.94P	
		PsF	—	1920x1080	SDI output[4]: 29.97PsF (59.94i) HDMI output: 59.94i	
1920x1080	59.94P 29.97P 23.98P	P	3840x2160	1920x1080[3]	Same as that for video configuration	
			1920x1080	1920x1080[3]	Same as that for video configuration	
			1280x720 (59.94P)	1280x720	59.94P	
		PsF	—	1920x1080	SDI output[4]: 29.97PsF (59.94i) HDMI output: 59.94i	
1280x720	59.94P	—	—	1280x720	59.94P	

[1] MENU ➤ [Display Setup] ➤ [SDI/HDMI Scan Mode] (XA45) or [HDMI Scan Mode] (XA40) setting.
[2] For HDMI output: MENU ➤ [Display Setup] ➤ [HDMI Max Resolution] setting.
XA45 For SDI output: MENU ➤ [Display Setup] ➤ [SDI Output] setting.
[3] XA45 Only HDMI output is available for this video configuration.
[4] XA45 only.
[5] YCbCr 4:2:0 video recorded on the card is output as a YCbCr 4:2:2 signal.

Connecting to an External Monitor

When you connect the camcorder to an external monitor for playback, use the terminal that matches the one you with to use on the monitor (XA45 only) or the HDMI OUT terminal. Then, select the video signal output configuration. You can output also the onscreen displays (108).

Operating modes: CAMERA MEDIA | AUTO M

Connection Diagram

We recommend that you power the camcorder from a power outlet using the compact power adapter.

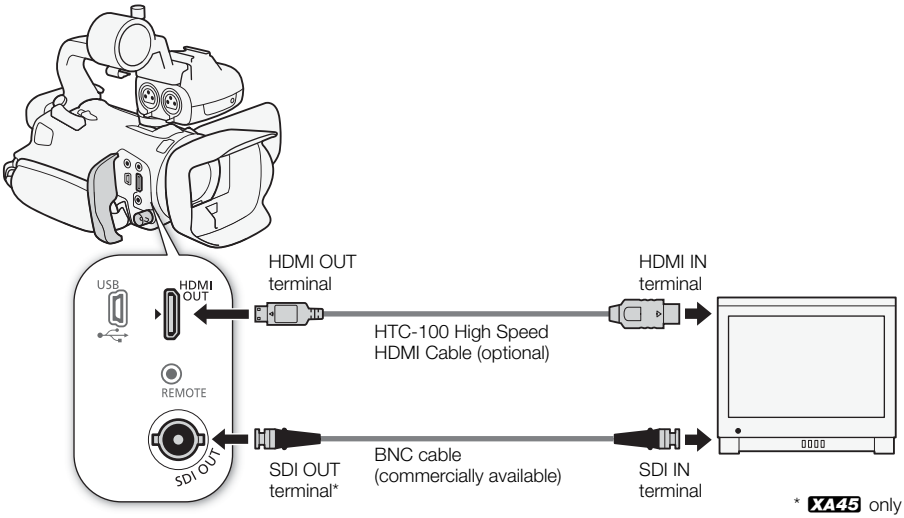

XA45 Selecting the Terminal Used For Output

Select in advance to output video and audio signals from the SDI OUT terminal or HDMI OUT terminal.

Operating modes: CAMERA MEDIA | AUTO M

1 Select [Output Terminal].
MENU ➤ [1 Display Setup] ➤ [Output Terminal]

2 Activate the output terminal and then select [✕].
- Select [SDI SDI] (SDI OUT terminal) or [HDMI HDMI] (HDMI OUT terminal), depending on the connection you wish to use.

NOTES
- The camcorder cannot output signals to the SDI OUT terminal and HDMI OUT terminals simultaneously.

XA45 Using the SDI OUT Terminal

The digital signal that is output from the SDI OUT terminal includes the video signal, audio signal, time code and recording command. You can output also the onscreen displays (108).
Make sure the SDI OUT terminal is set for output in advance (96).

1 Select [SDI Output].
MENU ➤ [1 Display Setup] ➤ [SDI Output]
2 Select the desired maximum resolution and then select [↩].
3 Select [3G-SDI Mapping].
MENU ➤ [1 Display Setup] ➤ [3G-SDI Mapping]
4 Select the desired option and then select [↩].
- You can select a video output signal compliant with Level A or Level B of the SMPTE ST 425-1 standard.

NOTES

- The time code signal will not be output from the SDI OUT terminal when slow & fast motion recording is activated.
- The frames value in the time code will run from 0 to 29 instead of 0 to 23 in the following cases.
  - MENU ➤ [Display Setup] ➤ [SDI/HDMI Scan Mode] is [PsF PsF (Forced 1080i)] and the frame rate is 23.98P.
  - When the output is 1280x720.
- You can set MENU ➤ [Recording Setup] ➤ [Rec Command] to [ON On] to use the camcorder's START/STOP button to control also the recording operation of an external recorder connected to the SDI OUT terminal.

Using the HDMI OUT Terminal

The digital signal that is output from the HDMI OUT terminal includes the video signal and audio signal. You can output also the time code signal and some assistance displays (onscreen displays, markers, etc.) in order to check them also on an external monitor. XA45 Make sure the HDMI OUT terminal is set for output in advance (96).
The audio output signal will be 2-channel linear PCM audio (16-bit, 48 kHz sampling).

1 Select [HDMI Max Resolution].
MENU ➤ [1 Display Setup] ➤ [HDMI Max Resolution]
2 Select the desired maximum resolution and then select [↩].
3 CAMERA mode only: To output the time code signal, select [HDMI Time Code].
MENU ➤ [2 Recording Setup] ➤ [HDMI Time Code]
4 Select [On] and then select [✕].

NOTES

- The HDMI OUT terminal on the camcorder is for output only. Do not connect it to an HDMI output terminal on an external device, as this may damage the camcorder.
- Correct operation cannot be guaranteed when connecting the camcorder to DVI monitors.
- Video may not be output correctly depending on the monitor.
- If the connected monitor is not compatible with the signal output from the camcorder, then HDMI output will stop.
- The time code signal will not be output from the HDMI OUT terminal in the following cases.
  - In MEDIA mode.
  - When slow & fast motion recording is activated.
  - When the output is 720x480 / 59.94P.
- The frames value in the time code will run from 0 to 29 instead of 0 to 23 in the following cases.
  - MENU ➤ [Display Setup] ➤ [SDI/HDMI Scan Mode] (XA45 only) or [HDMI Scan Mode] (XA40 only) is [PsF PsF (Forced 1080i)] and the frame rate is 23.98P.
  - When the output is 1280x720.
- You can set both MENU ➤ [Recording Setup] ➤ [Rec Command] and [HDMI Time Code] to [ON On] to use the camcorder's START/STOP button to control also the recording operation of an external recorder connected to the HDMI OUT terminal. The camcorder's time code signal will be output as well.

Audio Output

The camcorder can output audio from the SDI OUT terminal (XA45 only), HDMI OUT terminal, 🎧 (headphone) terminal or speaker (monaural; MEDIA mode only). When recording or playing back clips recorded with 4-channel audio, you can select the 2-channel output.

Audio output configuration

MP4 audio format[1]	Audio configuration of the recorded clips	Audio output configuration	
		XA45 SDI OUT terminal	HDMI OUT terminal
[4CH LPCM 16bit 4CH]	4-channel linear PCM, 16 bit	4-channel linear PCM, 24 bit	2-channel linear PCM, 16 bit
[2CH AAC 16bit 2CH]	2-channel AAC, bit rate: 256 kbps		

[1] [Recording Setup] ➤ [MP4 Audio Format] setting.

Operating modes: CAMERA MEDIA | AUTO M

Selecting the Audio Channels for Headphone or Speaker Output

You can select the 2-channel output from the 🎧 (headphone) terminal or speaker.

1 Select [Monitor Channels].
MENU ➤ [♪)) 3 Audio Setup] ➤ [Monitor Channels]
2 Select the desired option and then select [✕].
- The options show combinations of audio channels output from the left and right (L/R), respectively. Options with a "+" sign ([CH1+2], for example) indicate a mix of two audio channels on the same side.

Selecting the Audio Channels for HDMI Output

The audio signal output from the HDMI OUT terminal will be 2-channel linear PCM audio (16-bit, 48 kHz sampling).

1 Select [HDMI Channels].
MENU ➤ [♪)) 3 Audio Setup] ➤ [HDMI Channels]
2 Select the desired option and then select [✕].

NOTES

- If you set an assignable button to [Monitor Channels] (📖 85), you can press the button to toggle between the audio channel output options.

7 Saving Clips

Working with Clips on a Computer

Make sure to save clips recorded with this camcorder to a computer. To do so, you will need a card reader connected to a computer or a computer with an SD card slot. For details on transferring files from the SD card, refer to the computer's instruction manual or OS's help modules.
Under certain circumstances, clips may be split and recorded as separate files. Using MP4 Join Tool you can join the split files of and save them as a single seamless clip.

Transferring Files to the Computer

1 Insert an SD card with the desired clips into the SD card slot of the computer or card reader connected to the computer.
2 Follow the OS's onscreen instructions.
3 Copy the clips on the SD card to the computer.
- Recordings on the SD card are located in folders named "XXX_mmdd" under the "DCIM" folder, where XXX is the folder number (100 to 999) and mmdd stands for the recording date (📖 107).

Joining Clips Split by the Camcorder

Use MP4 Join Tool to join clips split by the camcorder in the following cases.
- When the camcorder switches to the other SD card while recording video due to the relay recording function (📖 32).
- The video (stream) file in the clip will be split approximately every 4 GB.

MP4 Join Tool is available as a free download (for Windows or macOS) from your local Canon website. Check the download page for the system requirements and latest information.
You will find detailed instructions about installing and uninstalling the software in the "Read This First" file (Install-MP4 Join Tool.pdf) included in the compressed file you download. For details about using the software, refer to the instruction manual (PDF file) that is installed with the software.

Copying Clips and Photos Between SD Cards

You can copy clips and photos from one SD card to the other.

Operating modes: CAMERA MEDIA | AUTO M

1 Open the desired index screen (📖 88).
- To copy all the clips or photos recorded on the same date (saved in the same folder), drag your finger left/right until a clip or photo you want to copy appears.

2 Select [Copy (A ➔ B)] or [Copy (B ➔ A)].
[FUNC] ➤ [Copy (A ➔ B)] or [Copy (B ➔ A)]

3 Select the desired option and then select [Yes].
- When you select [Select], perform the following procedure to select the individual recordings you want to copy before selecting [Yes].
- Select [Stop] to interrupt the operation while it is in progress.

4 When the confirmation message appears, select [OK].

To select individual recordings

1 Select on the individual clips/photos you want to copy.
- A checkmark ✓ will appear on the recordings you select. The total number of selected clips/photos will appear next to the ☑ icon.
- Select a selected clip or photo to remove the checkmark. To remove all checkmarks at once, select [Remove All] ➤ [Yes].

2 After selecting all the desired recordings, select [OK].

Options

<folder name>: Copies all the clips or photos recorded on a particular date. The last 4 digits of the folder name in the button indicate the recording date (1025 = October 25).

[Select]: You can select the individual clips or photos you want to copy.

[All Clips], [All Photos]: Copies all the clips or photos.

Copying a Photo during Playback

1 Play back the desired photo (📖 88).

2 Touch the screen to display the playback controls and then copy the photo.
[FUNC] ➤ [Copy (A ➔ B)] or [Copy (B ➔ A)] ➤ [Proceed] ➤ [Yes]

3 Drag your finger left/right to select another photo to copy or select [✕].

NOTES
- In the following cases, you will not be able to copy recordings to an SD card:
  - If the SD card compartment cover is open.
  - If the LOCK switch on the destination SD card is set to prevent writing.
  - If a file number (📖 107) cannot be created because the number of folders and files in the card has reached its maximum.
- If there is not enough space on the destination SD card, as many photos as possible will be copied before stopping the operation.
- Video stream files over 4 GB in size cannot be copied onto SDHC cards.

8 Additional Information

Menu Options

Menu items not available appear grayed out. For details about how to select an item, refer to *Using the Menus* (📖 27). For details about each function, see the reference page. Menu options without a reference page are explained after the tables. Underlined menu options indicate default values.

FUNC Menu

FUNC Menu (CAMERA Mode)

Onscreen button	Setting options/Function	AUTO	M	📖
[IRIS Aperture]	Aperture value adjustment dial, F1.8 to F8.0; Zebra pattern button*: [Off], [70 70%], [100 100%]	–	●	43
[SHTR Shutter Speed]	Shutter speed adjustment dial, 1/6 to 1/2000; Zebra pattern button*: [Off], [70 70%], [100 100%]	–	●	43
[GAIN Gain]	Gain value adjustment dial, 0.0 dB to 24.0 dB; Zebra pattern button*: [Off], [70 70%], [100 100%]	–	●	42
[GAIN AGC Limit]	[M] (manual): Turn on/off (off), when [M] is selected –gain limit adjustment dial, 0.0 dB to 23.0 dB	–	●	48
[Exposure Comp.]	Exposure adjustment dial, [ ] (Touch exposure settings): [N Normal], [H Highlights]; Zebra pattern button*: [Off], [70 70%], [100 100%]; [✕] (AE lock): Turn on/off (off).	–	●	42
[White Balance]*	[AWB Automatic], [☀ Daylight], [☀ Tungsten], [K Color Temperature], [1 Set 1], [2 Set 2]	–	●	49
[BLC Always On]*	[Off], [On]	–	●	47
[Focus]	[A Automatic], [M Manual], when [M] is selected – focus preset button; [ ] (peaking settings): [Peaking and B&W], [Peaking Color], [PEAK] (peaking): Turn on/off (off).	–	●	57
[MAGN. Magnification]	[OK]	–	●	59
[ZOOM Zoom]	Onscreen zoom controls, [PHOTO] (take a photo), [START]/[STOP] (record a clip); [2.0×] (digital tele-converter): Turn on/off (off).	●	●	55
[Looks]	[ ] (look settings):[Sharpness], [Contrast], [Color Depth]	–	●	51
[Audio]	Audio levels for audio channels CH1 to CH4; [A Automatic], [M Manual], when [M Manual] is selected – Audio level adjustment [◀], [▶]: 0 to 100 (50).	●	●	74

* The button shows the icon of the current setting.

FUNC Menu (MEDIA Mode)

Menu item	Setting options and additional information		
For clips:	[ ] index screen	Single clip (playback pause)	
[Copy (A → B)], [Copy (B → A)]	*<folder name>*, [Select], [All Clips]	–	101
[Delete]		●	92
[Trim]	–	●	93
For photos:	[ ] index screen	Single photo view	
[Copy (A → B)], [Copy (B → A)]	*<folder name>*, [Select], [All Photos]	●	101
[Delete]		●	92

Setup Menus

[Camera Setup] menu (CAMERA mode only)

Menu item	Setting options	📖
[Digital Zoom]	[OFF Off], [400x 400x], [2.0x Digital Tele-conv.]	–
[Soft Zoom Control]	[OFF Off], [START Start], [STOP Stop], [START STOP Start & Stop]	55
[Zoom Speed Level]	[Fast], [Normal], [Slow]	53
[Grip Zoom Operation]	[Enable Enable], [Disable Disable]	53
[Grip Zoom Speed]	[VAR] (variable speed), [CONST] (constant speed) When [CONST]: 1-16 (8)	53
[Handle Zoom Operation]	[Enable Enable], [Disable Disable]	53
[Handle Zoom Speed]	1-16 (8)	54
[High-Speed Zoom]	[ON On], [OFF Off]	54
[AF Mode]	[I.AF Instant AF], [M.AF Medium AF], [AF Normal AF]	60
[Face Detection & Tracking]	[ON On], [OFF Off]	61
[Focus Preset Speed]	[Fast], [Normal], [Slow]	–
[Auto Backlight Correction]	[ON On], [OFF Off]	–
[Auto Slow Shutter]	[ON On], [OFF Off]	–
[Flicker Reduction]	[OFF Off], [A Automatic]	–
[ND Filter]	[A Automatic], [OFF Off]	46
[Conversion Lens]	[Tele TL-H58], [Wide WA-H58], [OFF Off]	–
[Image Stabilizer]	[OFF Off], [Standard], [Dynamic]	63
[Powered IS Button]	[ON Press and Hold], [ON OFF Toggle On/Off]	–
[Set WB Priority]	[AWB Automatic], [Daylight], [Tungsten], [K Color Temperature], [Set 1], [Set 2]	–
[Focus/Zoom Ring Operation]	[Enable Enable], [Disable Disable]	–
[Focus Ring Direction]	[NORM Normal], [REV Reverse]	–
[Focus Ring Response]	[Fast], [Normal], [Slow]	–

Menu item	Setting options	📖
[Zoom Ring Direction]	[NORM Normal], [REV Reverse]	–
[IR Light]	[ON On], [OFF Off]	–
[IR Rec Color]	[WHITE White], [GREEN Green]	80

[Digital Zoom]: Determines the operation of the digital zoom.

- When you zoom, once you exceed the optical zoom range, the camcorder will automatically switch to digital zoom.
- With the digital zoom the image is digitally processed, so the image resolution will deteriorate the more you zoom in.
- Digital zoom is not available in AUTO mode or when MENU ➤ [Camera Setup] ➤ [Conversion Lens] is set to [Wide WA-H58].

[Focus Preset Speed]: Determines the speed at which the focus changes to the preset position.

[Auto Backlight Correction]: When set to [ON On], the camcorder will automatically detect and compensate the exposure for backlit subjects. This is useful in situations in which the subject is not constantly backlit.

- Automatic backlight correction is not available in the following cases:
  - When the camcorder is in AUTO mode.
  - When the shooting mode is M, [Night Scene], [Snow], [Beach], [Sunset], [Spotlight] or [Fireworks].
  - During infrared mode.

[Auto Slow Shutter]: The camcorder automatically uses slow shutter speeds to obtain brighter recordings in places with insufficient lighting.

- When this setting is set to [ON On], the minimum shutter speed used is: 1/30 (59.94P), 1/15 (29.97P) or 1/12 (23.98P).
- The auto slow shutter is available only during AUTO mode, when the shooting mode is set to [P Programmed AE] or during infrared mode.
- If a trailing afterimage appears, set the slow shutter to [OFF Off].
- We recommend stabilizing the camcorder, for example, by mounting it on a tripod.
- The camcorder will not use auto slow shutter when the AGC limit is set.

[Flicker Reduction]: When set to [A Automatic], the camcorder will automatically detect and reduce flicker.

- When recording under light sources such as fluorescent, mercury or halogen lamps, the screen may flicker depending on the shutter speed. You may be able to avoid flicker by setting the shutter speed mode to a value matching the frequency of the local electrical system: 1/100 for 50 Hz systems, 1/60 for 60 Hz systems.

[Conversion Lens]: When you attach to the camcorder the optional TL-H58 Tele-converter or WA-H58 Wide Attachment, set the appropriate conversion lens setting. The camcorder will then optimize the image stabilization and adjust the minimum object distance. The minimum object distance throughout the entire zoom range will be 130 cm (4 ft. 3 in.) for the tele-converter and about 60 cm (2 ft.) for the wide attachment. When you select [Wide WA-H58] and you zoom in, the zoom position marker will stop before reaching the end of the zoom bar.

- The tele-converter increases the focal length by a factor of approximately 1.5 while the wide attachment decreases it by a factor of approximately 0.75.
- When you select a setting other than [OFF Off], the AF mode is automatically set to [AF Normal AF].
- The approximate focusing distance displayed on the screen will change depending on the setting. If you are not using an optional conversion lens, select [OFF Off].

[Powered IS Button]: Determines the operation mode of the assignable button set to [Powered IS] (63).

[ON Press and Hold]: Powered IS will be activated while you hold the button pressed down.

[ON/OFF Toggle On/Off]: Each press of the button will turn the Powered IS function on and off.

[Set WB Priority]: Convenient for times when you need to use a particular white balance setting frequently. You can press an assignable button set to [WB WB Priority] to switch between the current white balance and the white balance setting selected for [Set WB Priority].

[Focus/Zoom Ring Operation]: Selects whether to enable or disable the focus/zoom ring's operation.

[Focus Ring Direction]: Changes the direction the focus/zoom ring needs to be turned when focusing. This setting affects the focus/zoom ring only when using it to adjust the focus (when the focus/zoom ring switch is set to FOCUS).

[Focus Ring Response]: Selects the sensitivity of the response when focusing using the focus/zoom ring. This setting affects the focus/zoom ring only when using it to adjust the focus (when the focus/zoom ring switch is set to FOCUS).

[Zoom Ring Direction]: Changes the direction the focus/zoom ring needs to be turned when using it to adjust the zoom (when the focus/zoom ring switch is set to ZOOM).

[IR Light]: Turns the infrared light on and off. The light is located on the handle unit so make sure you attach it to the camcorder in advance.

- If set to [ON On], the infrared light is always on when the camcorder is in infrared mode.

[▶ Playback Setup] menu (MEDIA mode only)

Menu item	Setting options	MEDIA		
[MP4 Data Code]	[OFF Off], [Date]	●	–	–
[Data Code]	[OFF Off], [Date], [Time], [Date and Time], [Camera Data]	–	●	

[Data Code]: For clips, displays the date a clip was recorded. For photos, displays the date and/or time or camera setting used when a photo was recorded.

[Recording Setup] menu

Menu item	Setting options	CAMERA	MEDIA	📖
[MP4 Resolution]	[3840x2160 (150 Mbps)], [1920x1080 (35 Mbps)], [1920x1080 (17 Mbps)], [1280x720 (8 Mbps)]	●	–	37
[MP4 Frame Rate]	[59.94P 59.94P], [29.97P 29.97P], [23.98P 23.98P]	●	–	37
[MP4 Audio Format]	[2CH AAC 16bit 2CH], [4CH LPCM 16bit 4CH]	●	–	68
[Recording Media]	[Rec Media for Movies]: [A Mem. Card A], [B Mem. Card B]	●	–	32
	[Rec Media for Photos]: [A Mem. Card A], [B Mem. Card B]	●	–	
[Dual/Relay Recording]	[Standard Recording], [Dual Recording], [A Relay Recording] (or [B Relay Recording])	●	–	32
[Slow & Fast Motion]	[OFF], [x0.4], [x0.5], [x0.8], [x2], [x4], [x10], [x20], [x60], [x120], [x600], [x1200]	●	–	38
[Available Space in Memory]	[A], [B]	●	–	–
[Used Space in Memory]	[A], [B]	–	●	–
[Initialize SD]	[A Mem. Card A], [B Mem. Card B]	●	●	32
[Rec Command]	[ON On], [OFF Off]	●	–	35
[HDMI Time Code]	[ON On], [OFF Off]	●	–	–
[Time Code Mode]	[PRESET Preset], [REGEN. Regen.]	●	–	64
[Time Code Running Mode]	[REC RUN Rec Run], [FREE RUN Free Run]	●	–	64
[DF/NDF]	[DF DF], [NDF NDF]	●	–	66
[Initial Time Code]	00:00:00.00 to 23:59:59.29, [Reset]	●	–	65
[User Bit Type]	[SET Setting], [TIME Time], [DATE Date]; [ ]: user bit input screen (00 00 00 00 to FF FF FF FF).	●	–	67
[Color Bars]	[OFF Off], [SMPTE SMPTE], [ARIB ARIB]	●	–	77
[1 kHz Tone]	[-12dB –12 dB], [-18dB –18 dB], [-20dB –20 dB], [OFF Off]	●	–	77
[MP4 Clip / Photo Numbering]	[Reset], [Continuous]	●	●	–

[Available Space in Memory]/[Used Space in Memory]: Displays a screen where you can verify how much of the SD card is currently available for recording or how much is in use (total recording time and total number of photos).

- Estimated figures about available clip recording time and available number of photos are approximate and based on the video configuration currently in use and a photo size of 1920x1080.
- You can also check the SD card's Speed Class.

[HDMI Time Code]: When set to [ON On], the HDMI signal output from the camcorder includes the camcorder's time code.

[MP4 Clip / Photo Numbering]: Clips and photos are saved as files in folders. You can select the file numbering method for those files. File numbers appear on screens in playback mode in a format such as "101-0107". The first 3 digits indicate the folder number and the last 4 digits are different for each file in a folder.

[Reset]: File numbers will restart from 100-0001 every time you insert a new (or initialized) SD card. If the card already contains previous recordings, file numbers will continue from the number following that of the last recording on the SD card.

[Continuous]: File numbers will continue from the number following that of the last file recorded with the camcorder. This setting is the most convenient for managing files on a computer. We recommend using the [Continuous] setting.

Understanding folder names

- An example folder name is “101_1025”. The first 3 digits indicate the folder number (from 100 to 999) and the last 4 digits indicate the month and day when the folder was created. In the example, the folder numbered 101 was created on October 25.
- Each folder can contain up to 500 files (clips and photos combined). When that number is exceeded, a new folder is created automatically.

Understanding file numbers

- An example file number is “101-0107”. The first 3 digits indicate the folder number where the clip/photo is stored and the last 4 digits indicate the consecutive number assigned to the recording (from 0001 to 9999).
- The file number also indicates the name and location of the file on the SD card. For example, a clip numbered 101-0107 that was recorded on October 25, is located in the “**DCIM\101**_1025” folder as the file “**MVI_0107.MP4**”; a photo with the same file number will be saved in the same folder as the file “**IMG_0107.JPG**”.

[Audio Setup] menu

Menu item	Setting options				
[CH2 Input]	[INPUT2 INPUT 2], [INPUT1 INPUT 1]	●	–	–	71
[INPUT 1 Mic Trimming]	[+12dB +12 dB], [+6dB +6 dB], [0dB 0 dB], [-6dB –6 dB], [-12dB –12 dB]	●	–	–	72
[INPUT 1 Mic Att.]	[ON On], [OFF Off]	●	–	–	73
[INPUT 2 Mic Trimming]	[+12dB +12 dB], [+6dB +6 dB], [0dB 0 dB], [-6dB –6 dB], [-12dB –12 dB]	●	–	–	72
[INPUT 2 Mic Att.]	[ON On], [OFF Off]	●	–	–	73
[INPUT 1/2 Limiter]	[ON On], [OFF Off]	●	–	–	72
[INPUT 1/2 ALC Link]	[LINK Linked], [SEP. Separated]	●	–	–	72
[Built-in Mic Sensitivity]	[NORM Normal], [HIGH High]	●	–	–	74
[Built-in Mic Att.]	[A Automatic], [ON On], [OFF Off]	●	–	–	75
[Built-in Mic Low Cut]	[ON On], [OFF Off]	●	–	–	75

Menu item	Setting options				
[MIC Att.]	[A Automatic], [ON On], [OFF Off]	●	–	–	75
[MIC Low Cut]	[ON On], [OFF Off]	●	–	–	75
[MIC ALC Link]	[LINK Linked], [SEP. Separated]	●	–	–	73
[MIC Power]	[ON On], [MIC OFF Off]	●	–	–	73
[Headphone Volume]	, OFF 0-15 (8)	●	●	●	76
[Speaker Volume]	, OFF 0-15 (8)	–	●	●	91
[Monitor Channels]	[CH1/2 CH1/CH2], [CH1/1 CH1/CH1], [CH2/2 CH2/CH2], [CH1+2/1+2 CH1+2/CH1+2], [CH3/4 CH3/CH4], [CH3/3 CH3/CH3], [CH4/4 CH4/CH4], [CH3+4/3+4 CH3+4/CH3+4], [CH1+3/2+4 CH1+3/CH2+4]	●	●	●	99
[HDMI Channels]	[CH1/2 CH1/CH2], [CH3/4 CH3/CH4]	●	●	●	99
[Notification Sounds]	[High Volume], [Low Volume], [OFF Off]	●	●	●	–

[Notification Sounds]: A beep will accompany some of the camcorder's operations.

- While pre-recording (78) is activated, the camcorder will not emit any notification sounds.

[Display Setup] menu

Menu item	Setting options	CAMERA	MEDIA	
XA45 [Output Terminal]	[SDI SDI], [HDMI HDMI]	●	●	96
[HDMI Max Resolution]	[3840x2160]*, [1920x1080], [1280x720(59.94P)] * MEDIA mode only.	●	●	97
XA45 [SDI Output]	[1920x1080], [1280x720(59.94P)]	●	●	97
XA45 [3G-SDI Mapping]	[Level A Level A], [Level B Level B]	●	●	97
XA45 [SDI/HDMI Scan Mode] XA40 [HDMI Scan Mode]	[P P], [PsF PsF (Forced 1080i)]	●	●	97
[Output Status]	–	●	●	–
[LCD Brightness]		●	●	–
[LCD Backlight]	[Bright], [Normal], [Dim]	●	●	–
[Viewfinder Backlight]	[Bright], [Normal]	●	●	–
[LCD Mirror Image]	[ON On], [OFF Off]	●	–	–
[Output Onscreen Displays]	[ON On], [OFF Off]	●	●	–

Menu item	Setting options	CAMERA	MEDIA	📖
[Onscreen Markers]	[OFF Off], [Level (Gray)], [Level (White)], [Grid (Gray)], [Grid (White)]	●	–	–
[Distance Units]	[m meters], [ft feet]	●	●	–

[Output Status]: Displays a screen where you can verify the standard of the output signal from the SDI OUT (XA45 only) terminal or HDMI OUT terminal.

[LCD Brightness]: Adjusts the brightness of the LCD screen.

- Changing the brightness of the LCD screen does not affect the brightness of your recordings or the brightness of the playback image on a TV.

[LCD Backlight]/[Viewfinder Backlight]: Sets the screen to one of three brightness levels (for the LCD screen) or two brightness levels (for the viewfinder).

- Changing the brightness of the screen does not affect the brightness of your recordings or the brightness of the playback image on a TV.
- Using the [Bright] setting will shorten the effective usage time of the battery pack.

[LCD Mirror Image]: When this setting is set to [ON On], this function reverses the image on the screen horizontally when you rotate the LCD panel 180 degrees toward the subject. In other words, the screen will show a mirror image of the subject.

- If the camcorder, optional remote controller or a commercially available remote control is operated while the mirror image is displayed, the mirror image will deactivate temporarily for approximately 4 seconds.

[Output Onscreen Displays]: When set to [ON On], the camcorder's onscreen displays will appear also on the screen of a TV or monitor connected to the camcorder.

[Onscreen Markers]: You can display a grid or a horizontal line at the center of the screen. Use the markers as a reference to make sure your subject is framed correctly (vertically and/or horizontally).

- Onscreen markers are not available when magnification is activated.
- Using the onscreen markers will not affect the recordings.

[Distance Units]: Selects the units to use for the focusing distance display while focusing manually. This setting also affects units for GPS information when using the optional GP-E2 GPS Receiver.

[System Setup] menu

Menu item	Setting options	CAMERA	MEDIA	
[Language]	[Česky], [Dansk], [Deutsch], [Ελληνικά], [English], [Español], [Français], [Italiano], [Magyar], [Melayu], [Nederlands], [Norsk], [Polski], [Português], [Română], [Suomi], [Svenska], [Türkçe], [Русский], [Українська], [العربية], [فارسى], [ภาษาไทย], [简体中文], [繁體中文], [한국어], [日本語]	●	●	26
[Time Zone/DST]	[] (home time zone) or [] (travel time zone): [New York], list of world time zones [] (DST adjustment): Toggle on or off	●	●	26
[Date/Time]	[Date/Time]: ([Jan. 1, 2019 12:00 AM]) [Date Format]: [Y.M.D], [M.D.Y], [D.M.Y] (Y- year, M- month, D- day) [24H]: Toggle on (24-hour clock) or off (12-hour clock)	●	●	25
[POWER LED]	[ON On], [OFF Off]	●	●	23
[Tally Lamp]	[ON On], [OFF Off]	●	●	–
[ACCESS LED]	[ON On], [OFF Off]	●	●	31
[REMOTE Terminal]	[RC-V100 RC-V100 (REMOTE A)], [Std. Standard]	●	●	81
[Assignable Button 1] to [Assignable Button 5]	Following are the default settings for each assignable button. For a complete list of the functions that can be assigned, refer to the detailed table. 1: [AF/MF AF/MF], 2: [Pre REC], 3: [OFF Off], 4: [OFF Off], 5: [REC REVIEW Rec Review]	●	–	85
[Onscreen Assignable Button]	For a complete list of the functions that can be assigned, refer to the detailed table (default: [PHOTO Photo]).	●	–	85
[CUSTOM Dial & Button]	[Tv/Av/M Tv/Av/M], [GAIN AGC Limit], [Exposure Comp.], [OFF Off]	●	–	84
[Battery Info]	–	●	●	–
[Backup Menu Settings B]	[Save], [Load]	●	–	87
[GPS Auto Time Setting]*	[OFF Disable], [ON Auto Update]	●	–	–
[GPS Information Display]*	–	●	–	–
[Certification Information]	–	●	●	–
[Firmware]	–	●	–	–
[Reset All]	[No], [Yes]	●	●	–

* Option available only when the optional GP-E2 GPS Receiver is attached to the camcorder.

[Tally Lamp]: Activates the tally lamp when the camcorder is recording, the battery level is low or an SD card is full. When set to [OFF Off], the tally lamp will not turn on in these cases. The tally lamp is located on the handle unit so make sure you attach it to the camcorder in advance.

[Battery Info]: When you are using a battery pack that is compatible with Intelligent System, this option displays a screen where you can verify the battery charge (as a percentage) and the remaining recording time (CAMERA mode) or playback time (MEDIA mode).

- If the battery pack is depleted, the battery information may not be displayed.

[GPS Auto Time Setting]: When the optional GP-E2 GPS Receiver is attached to the camcorder, you can have the camcorder automatically set the [Date/Time] setting based on the information acquired from GPS. For more details, refer to *Setting Time from GPS on the Camera* in the receiver's instruction manual.

[GPS Information Display]: When the optional GP-E2 GPS Receiver is attached to the camcorder, this function allows you to view GPS information. For more details, refer to *Viewing GPS Information* in the receiver's instruction manual.

[Certification Information]: This displays select certification information that apply to this camcorder.

[Firmware]: You can verify the current version of the camcorder’s firmware. This menu option is usually unavailable.

[Reset All]: Resets all of the camcorder’s settings.

Appendix: Onscreen Icons and Displays

Recording

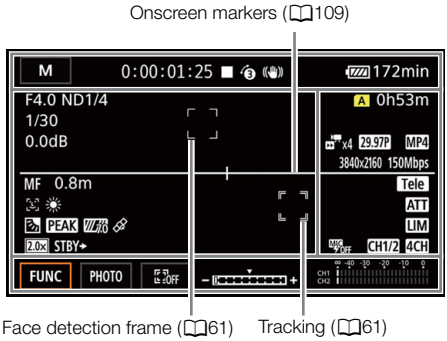

Left side of the screen

Icon/Display	Description
F00.0	Aperture value (43)
ND1/0	ND filter (46)
OFF, ON	Infrared light (80)
1/00000	Shutter speed (42)
00.0dB	Gain value (42)
AE +/-0 0/0 +/-0 0/0 ✳	Exposure compensation (45) Exposure lock (45)
GAIN 00.0dB	AGC limit (48)
I.AF, M.AF, AF, MF	Focus (57)
0.0ft, 000ft, ∞	Focusing distance • While adjusting the focus, the estimated focusing distance will be displayed.
,	Face detection & tracking (61)
, , K, 1, 2	White balance (49)
	Backlight correction (47)
PEAK, PEAK	Peaking (59)
70, 100	Zebra pattern (46)
	GPS active (82) Only when the optional GP-E2 GPS Receiver is attached to the camcorder.
2.0x	Digital tele-converter (56)
REC➔, STBY➔	Recording command (35)

Top of the screen

Icon/Display	Description
AUTO	AUTO mode (📖 34, 35)
P, Tv, Av, M, , , , , , , , ,	Shooting mode (📖 39)
IR	Infrared mode (📖 80)
00:00:00.00, 00:00:00:00	Time code (📖 64)
■, ●	Recording operation (📖 34) ■ Record standby, ● Recording
	Pre-recording mode (📖 78)
, , (in yellow)	Image stabilizer (📖 63)
, , , (in white), (in yellow), (in red) 000 min	Remaining battery charge (📖 17) The icon shows an estimate of the remaining charge. The remaining recording time is displayed, in minutes, next to the icon. • When is displayed in yellow, the battery charge is almost depleted. • When is displayed, replace the battery pack with a fully charged one. • Depending on the conditions of use, the actual battery charge may not be indicated accurately.
▶ A (in green), ▶ B (in green) ▶ A (in yellow), ▶ B (in yellow) A (in red), B (in red)	Photo recorded (📖 34) • When an icon is displayed in yellow, the indicated card is almost full. • When A (or B) is displayed, the photo cannot be recorded because of a problem with the SD card.

Right side of the screen

Icon/Display	Description
A/B 000h00m	Remaining recording time
A/B 000h00m (icon in yellow)	SD card almost full.
A/B End (icon in red)	No more free space on the SD card.
A (in red), B (in red)	No SD card or cannot record on the SD card.
A / B 000h00m	Relay recording (📖 32)
W T	Zoom bar (📖 52) • Appears only while zooming. The light blue portion indicates the digital zoom range.
x0.0, x0000	Slow & fast motion recording mode and slow/fast motion rate (📖 38)
59.94P, 29.97P, 23.98P	Frame rate (📖 37)
MP4	Movie format
0000x0000	Resolution (📖 37)
000Mbps	Bit rate (📖 37)
Tele, Wide	Conversion lens (📖 103)

Icon/Display	Description
ATT, A OFF	Microphone attenuator (📖 75)
LIM	Audio peak limiter (📖 72)
MIC OFF	MIC power (📖 73)
CH0/0, CH0+0/0+0	Audio output channel (📖 99)
4CH	Audio format (📖 68)

Bottom of the screen

Icon/Display	Description
[FUNC]	Opens the FUNC menu (📖 28, 102)
AF/MF, , MAGN., , , WB, , , REC REVIEW, PHOTO, CH/CH, MENU	Onscreen assignable button (📖 85) • By default, the [PHOTO Photo] function (take a photo) is assigned to the button.
[OFF]	Tracking (📖 61)
– +	Exposure bar (📖 43)
∞ -40 -30 -20 -10 0 CH1 CH2	Audio recording level (📖 72, 74)

Playback

Clips

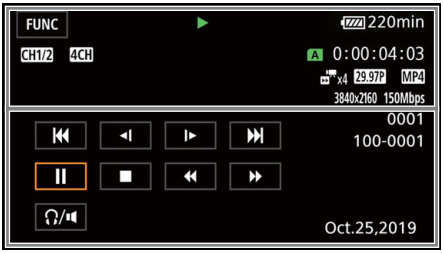

Photos

Top of the screen

Icon/Display	Description
[FUNC]	Opens the FUNC menu (📖 28).
▶, ❚❚, ◀◀, ▶▶, ◀❚, ❚▶, ◀❚❚, ❚❚▶	Playback operation (📖 90) ▶: Playback, ❚❚: Playback pause, ◀◀/▶▶: Fast playback, ◀❚/❚▶: Slow playback, ◀❚❚/❚❚▶: Frame reverse/advance
CH0/0, CH0+0/0+0	Audio output channel (📖 99)
4CH	Audio format (📖 68)
A / B	SD card in use.
00:00:00.00, 00:00:00:00	Time code (📖 64)
000000/000000	Current photo / Total number of photos
x0.0, x0000	Slow & fast motion recording mode and slow/fast motion rate (📖 38)
59.94P, 29.97P, 23.98P	Frame rate (📖 37)
MP4	Movie format
0000x0000	Resolution (📖 37)
000Mbps	Bit rate (📖 37)
000000	Clip number
000-0000	File number (📖 107)

Bottom of the screen

Icon/Display	Description
❙◀◀, ▶▶❙, ❚❚, ▶, ■, ◀◀, ◀❚, ▶▶, ❚▶	Playback controls for clips (📖 90)
🎧/🔈	Headphone/Speaker volume (📖 76, 91)
▦, ⎙	Playback controls for photos (📖 90)
Time and date F00 1/00000	Data code (📖 105)

Troubleshooting

If you have a problem with your camcorder, refer to this section. Consult your dealer or a Canon Service Center if the problem persists.

Power source

The camcorder will not turn on or it turns off by itself.
- The battery pack is depleted. Replace or charge the battery pack.
- Remove the battery pack and reattach it correctly.

Cannot charge the battery pack.
- Make sure the camcorder is off so charging can start.
- The temperature of the battery pack is outside its operating range (approximately 0 – 40 °C (32 – 104 °F)). Remove the battery pack, warm it or let it cool down, as necessary, and try charging it again.
- Charge the battery pack in temperatures between approximately 0 °C and 40 °C (32 °F and 104 °F).
- The battery pack is faulty. Replace the battery pack.
- The camcorder cannot communicate with the battery pack attached. Battery packs not recommended by Canon for use with this camcorder cannot be charged using this camcorder.
- If you are using a battery pack recommended by Canon for use with this camcorder, there may be a problem with the camcorder or battery pack. Consult a Canon Service Center.

A noise can be heard from the compact power adapter.
- A faint sound can be heard while the compact power adapter is connected to a power outlet. This is not a malfunction.

The battery pack becomes depleted extremely quickly even at normal temperatures.
- The battery may have reached the end of its battery life. Buy a new battery pack.

Recording

Pressing the START/STOP button will not start recording.
- You cannot record while the camcorder is writing previous recordings onto an SD card (while the ACCESS indicator is on or flashing). Wait until the camcorder has finished.
- The lock lever on the handle is set to 🔒, rendering the handle's START/STOP button inoperable. Change the position of the lock lever.

The point where the START/STOP button was pressed does not match the beginning/end of the recording.
- There may be a slight interval between pressing the START/STOP button and the actual start/end of recording. This is not a malfunction.

The camcorder will not focus.
- Autofocus does not work on the subject. Focus manually (📖 57).
- The viewfinder is not adjusted. Use the dioptric adjustment lever to make the proper adjustment (📖 20).
- The lens or Instant AF sensor is dirty. Clean the lens or sensor with a soft lens-cleaning cloth (📖 126). Never use tissue paper to clean the lens.

Operating the grip zoom rocker has no effect.
- The grip zoom rocker is deactivated. Set [Camera Setup] ➤ [Grip Zoom Operation] to [Enable].

Operating the handle zoom rocker has no effect.
- The handle zoom rocker is deactivated. Set [Camera Setup] ➤ [Handle Rocker Operation] to [Enable].

Operating the focus/zoom ring has no effect.
- The focus/zoom ring is deactivated. Set [Camera Setup] ➤ [Focus/Zoom Ring Operation] to [Enable].

When a subject flits across in front of the lens, the image appears slightly bent.
- This is a phenomenon typical of CMOS image sensors. When a subject crosses very quickly in front of the camcorder, the image may seem slightly warped. This is not a malfunction.

Changing the operating mode between recording (●)/record standby (■)/playback (▶) takes longer than usual.
- When the SD card contains a large number of clips, some operations may take longer than usual. Save your recordings (📖 100) and initialize the card (📖 32).

Clips or photos cannot be recorded properly.
- This may occur as clips and photos are recorded/deleted over time. Save your recordings (📖 100) and initialize the card (📖 32).

After using the camcorder for a long time, it becomes hot.
- The camcorder may become hot after using it continuously for long periods of time; this is not a malfunction. If the camcorder becomes unusually hot or it becomes hot after using it only for a short while, it may indicate a problem with the camcorder. Consult a Canon Service Center.

Playback

Cannot delete clips/photos.
- The LOCK switch on the SD card is set to prevent accidental erasure. Change the position of the LOCK switch.
- Photos that were protected using other devices cannot be deleted with this camcorder.
- You may not be able to delete clips recorded or edited using another device.

Deleting clips takes longer than usual.
- When the SD card contains a large number of clips, some operations may take longer than usual. Save your recordings (📖 100) and initialize the card (📖 32).

Cannot copy clips/photos
- You may not be able to copy clips/photos recorded or edited using another device and then transferred to an SD card connected to the computer.

Cannot mark individual clips/photos in the index screen with a checkmark ✓
- You cannot select more than 100 clips/photos individually. Select the [All Clips] or [All Photos] option instead of [Select].

Indicators and Onscreen Displays

appears in red on the screen.
- Battery pack is depleted. Replace or charge the battery pack.

appears in red on the screen.
- The camcorder cannot communicate with the battery pack attached so the remaining battery time cannot be displayed.

The tally lamp does not light up.
- Change the [System Setup] ➤ [Tally Lamp] setting to [On].

The tally lamp flashes quickly. (4 flashes per second)
- The battery pack is depleted. Replace or charge the battery pack.
- There is not enough available space on the SD card selected for recording. Delete some recordings (□ 92) to free some space or replace the card.

A/B appears in red on the screen.
- The SD card is full. Delete some recordings (□ 92) to free some space or replace the card.

A⊘/B⊘ appears in red on the screen.
- A card error occurred. Turn off the camcorder. Remove and reinsert the SD card. Initialize the SD card (□ 32) if the display does not change back to normal.

Even after stopping recording, the ACCESS indicator stays illuminated in red.
- The clip is being recorded on the card. This is not a malfunction.

The red POWER/CHG indicator flashes rapidly (one flash at 0.5-second intervals).
- The temperature of the battery pack is outside its operating range (approximately 0 – 40 °C (32 – 104 °F)). Remove the battery pack, warm it or let it cool down, as necessary, and try charging it again.
- Charge the battery pack in temperatures between approximately 0 °C and 40 °C (32 °F and 104 °F).
- The battery pack is damaged. Use a different battery pack.
- Charging has stopped because the compact power adapter or the battery pack is faulty. Consult a Canon Service Center.

flashes on the screen.
- You connected the optional GP-E2 GPS Receiver to the camcorder in MEDIA mode. Disconnect the receiver and connect it again after setting the camcorder to CAMERA mode.

Picture and Sound

The screen appears too dark.
- Adjust the brightness with the [Display Setup] ❯ [LCD Brightness] or [LCD Backlight] setting.

Screen displays turn on and off repeatedly.
- The battery pack is depleted. Replace or charge the battery pack.
- Remove the battery pack and reattach it correctly.

Abnormal characters appear on the screen and the camcorder does not operate properly.
- Disconnect the power source and reconnect it after a short time.

Video noise appears on screen.
- Keep a distance between the camcorder and devices that emit strong electromagnetic fields such as near powerful magnets and motors, MRI machines or high-voltage power lines.

Horizontal bands appear on the screen.
- This is a phenomenon typical of CMOS image sensors when recording under some types of fluorescent, mercury or sodium lamps. This is not a malfunction. You may be able to reduce the symptoms by setting [Camera Setup] ❯ [Flicker Reduction] to [Automatic] or by setting the shutter speed to a value matching the frequency of the local electrical system (1/100 for 50 Hz systems, 1/60 for 60 Hz systems).

Viewfinder picture is blurred.
- Adjust the viewfinder with the dioptric adjustment lever (□ 20).

No picture appears on the viewfinder.
- Close the LCD panel and then pull out the viewfinder to activate it.

Audio cannot be recorded.
- The INPUT terminal ON/OFF switch is not set to the correct position.
- The external microphone connected to the INPUT 1/INPUT 2 terminal requires phantom power. Set the corresponding sensitivity selection switch for INPUT 1/INPUT 2 to MIC+48V (📖 71).
- The external microphone connected to the MIC terminal is not turned on or its battery is depleted. Alternatively, an external microphone compatible with plug-in power is connected but [Audio Setup] ➤ [MIC Power] is set to [Off].
- The audio recording level is not set correctly (📖 72, 74).

Sound is distorted or is recorded at lower levels.
- When recording near loud sounds (such as fireworks, shows or concerts), sound may become distorted or it may not be recorded at the actual levels. Activate the microphone attenuator (📖 73, 75), or adjust the audio recording level manually.

The picture is displayed correctly but there is no sound from the built-in speaker.
- Speaker volume is turned off. Adjust the volume (📖 91).
- During CAMERA mode, sound from the built-in speaker will be muted if headphones are connected to the camcorder.

SD Card and Accessories

Cannot insert the SD card.
- The SD card you are trying to insert is not facing the correct direction. Turn it over and insert it.

Cannot record on the SD card.
- A compatible SD card must be used (📖 30).
- Initialize the SD card (📖 32) when you use it with the camcorder for the first time.
- The SD card is full. Delete some recordings (📖 92) to free some space or replace the SD card.

The optional RC-V100 Remote Controller or commercially available remote control does not work.
- Make sure that [System Setup] ➤ [REMOTE Terminal] is set to [RC-V100 (REMOTE A)] when using the optional RC-V100 Remote Controller or to [Standard] when using a commercially available remote control.
- Turn off the camcorder, reconnect the remote controller and then turn the camcorder back on again.

Connections with External Devices

Video noise appears on a nearby TV screen.
- When using the camcorder in a room where a TV is located, keep a distance between the compact power adapter and the power or antenna cables of the TV.

Playback looks fine on the camcorder but there is no image on the external monitor.
- The camcorder is not connected correctly to the external monitor. Make sure the camcorder is connected correctly (📖 96).
- The video input on the external monitor is not set to the video terminal to which you connected the camcorder. Select the correct video input.

The camcorder is connected using the optional HTC-100 High Speed HDMI Cable, but there is no picture or sound from the external monitor.
- Disconnect the High Speed HDMI cable and then restore the connection or turn the camcorder off and then on again.
- The connected monitor is not compatible with the selected video configuration. Change the video configuration to one that the monitor supports.

The computer does not recognize the camcorder even though the camcorder is connected correctly.
- Connect the camcorder to the computer only while the photo index screen is displayed.
- Disconnect the USB cable and turn off the camcorder. After a short while, turn it on again and restore the connection.
- Connect the camcorder to a different USB port on the computer.

Cannot transfer clips and photos to the computer.
- The SD card contains too many clips and photos. Delete some recordings (📖 92) until the SD card contains a combined total of 2,500 (Windows)/1,000 (macOS) or fewer recordings.

List of Messages (in alphabetical order)

Accessing the memory card. Do not remove the memory card.
- You opened the SD card compartment cover while the camcorder was accessing the SD card or the camcorder started accessing the card as you opened the SD card compartment cover. Do not remove the SD card until this message disappears.

Back up recordings regularly
- This message may appear when you turn on the camcorder. In the event of a malfunction, recordings may be lost so back up your recordings regularly.

Battery communication error. Does this battery display the Canon logo?
- You attached a battery pack that is not recommended by Canon for use with this camcorder.
- If you are using a battery pack recommended by Canon for use with this camcorder, there may be a problem with the camcorder or battery pack. Consult a Canon Service Center.

Battery pack is not compatible. Turning off the camcorder.
- A battery pack not recommended by Canon for use with this camcorder was attached and the camcorder was turned on. The camcorder will automatically turn off in 4 seconds.

Cannot play back
- Clips cannot be played back from a 512 MB or smaller SD card. Use a compatible SD card (📖 30).

Cannot play back Initialize only using the camcorder
- The SD card in the camcorder was initialized using a computer. Initialize the card with this camcorder (📖 32).

Cannot record on this memory card
- Clips cannot be recorded on a 512 MB or smaller SD card. Use a compatible SD card (📖 30).

Cannot trim the clip
- Clips that were recorded or copied using other devices cannot be trimmed.

Charge the battery pack
- Battery pack is depleted. Charge the battery pack.

Check the memory card
- Cannot access the SD card. Check the SD card and make sure it is working correctly and inserted correctly.
- An SD card error occurred. The camcorder cannot record or display the image. Try removing and reinserting the SD card, or use a different SD card.
- You inserted a MultiMedia Card (MMC) into the camcorder. Use a recommended SD card (📖 30).
- If after the message disappears, A/B appears in red, perform the following: Turn off the camcorder and remove and reinsert the SD card. If A/B turns back to green you can resume recording/playback. If the problem persists, save your recordings (📖 100) and initialize the SD card (📖 32).

File name error
- The folder and file numbers have reached their maximum value. Set [Recording Setup] ➤ [MP4 Clip / Photo Numbering] to [Reset] and initialize the SD card (📖 32).

Initialize only using the camcorder
- Initialize the SD card with this camcorder (📖 32).

May not be possible to record movies on this memory card
- An SD card error occurred. The camcorder cannot record or display the image. Try removing and reinserting the SD card, or use a different SD card.

Memory card cover is open
- After inserting an SD card, close the SD card compartment cover.

Memory card is full
- The SD card is full. Delete some recordings (📖 92) to free some space or replace the SD card.

Memory card is write-protected
- The LOCK switch on the SD card is set to prevent accidental erasure. Change the position of the LOCK switch.

No clips
- There are no clips on the SD card selected.

No memory card
- Insert a compatible SD card into the camcorder (📖 30).

No photos
- There are no photos to play back.

Operation canceled
- Cannot access the SD card. Check the SD card and make sure it is working correctly and inserted correctly.
- An SD card error occurred. The camcorder cannot record or display the image. Try removing and reinserting the SD card, or use a different SD card.

Recording was stopped due to insufficient write speed of the memory card
- The write speed of the SD card was too slow so recording was stopped. To record clips with a resolution of 3840x2160 or clips using slow & fast motion recording mode, use an SD card that is rated UHS Speed Class U3. To record other clips, use an SD card that is rated SD Speed Class 6 or 10, or UHS Speed Class U1 or U3.
- After repeatedly recording, deleting and editing clips (fragmented memory), it will take longer to write data on the SD card and recording may stop. Save your recordings (📖 100) and initialize the SD card (📖 32).

Some clips could not be deleted
- Clips that were protected/edited with other devices and then transferred to an SD card connected to the computer cannot be deleted with this camcorder.

Task in progress. Do not disconnect the power source.
- The camcorder is updating the SD card. Wait until the operation ends and do not disconnect the compact power adapter or remove the battery pack.

Too many photos and MP4 movies. Disconnect the USB cable.
- Disconnect the USB cable. Try using a card reader or decrease the combined number of MP4 clips and photos on the SD card to fewer than 2,500 (Windows), or 1,000 (macOS).
- If a dialog box appeared on the computer screen, close it. Disconnect the USB cable, and restore the connection after a short while.

Safety Instructions and Handling Precautions

Be sure to read these instructions in order to operate the product safely.

⚠ **WARNING**

Denotes the risk of serious injury or death.

- Stop using the product in any case of unusual circumstances such as the presence of smoke or a strange smell.
- Do not touch any exposed internal parts.
- Do not get the product wet. Do not insert foreign objects or liquids into the product.
- Do not touch the product connected to a power outlet during lightning storms. This may cause electric shock.
- Do not disassemble or modify the product.
- Do not expose the product to strong shocks or vibration.
- Observe the following instructions when using commercially available batteries or provided battery packs.
  - Use batteries/battery packs only with their specified product.
  - Do not heat batteries or expose them to fire.
  - Do not charge batteries/battery packs using non-authorized battery chargers.
  - Do not expose the terminals to dirt or let them come into contact with metallic pins or other metal objects.
  - Do not use leaking batteries/battery packs. If a battery/battery pack leaks and the material contacts your skin or clothing, flush the exposed area thoroughly with running water. In case of eye contact, flush thoroughly with copious amounts of clean running water and seek immediate medical assistance.
  - When disposing of batteries/battery packs, insulate the terminals with tape or other means. This may cause electric shock, explosion or fire.
- Use only power sources specified in this instruction manual for use with the product.
- Observe the following instructions when using a battery charger or AC adapter.
  - Do not plug in or unplug the product with wet hands.
  - Do not use the product if the power plug is not fully inserted into the power outlet.
  - Do not expose the power plug and terminals to dirt or let them come into contact with metallic pins or other metal objects.
  - Do not place heavy objects on the power cord. Do not damage, break or modify the power cord.
  - Do not wrap the product in cloth or other materials when in use or shortly after use when the product is still warm in temperature.
  - Do not unplug the product by pulling the power cord.
  - Do not leave the product connected to a power source for long periods of time.
- Do not allow the product to maintain contact with the same area of skin for extended periods of time during use. This may result in low-temperature contact burns, including skin redness and blistering, even if the product does not feel hot. The use of a tripod or similar equipment is recommended when using the product in hot places and for people with circulation problems or less sensitive skin.
- Keep the product out of the reach of young children.
- Periodically remove any dust buildup from the power plug and power outlet using a dry cloth.

⚠ **CAUTION**

Denotes the risk of injury.

- Do not leave the product in places exposed to extremely high or low temperatures. The product may become extremely hot/cold and cause burns or injury when touched.
- Only mount the product on a tripod that is sufficiently sturdy.
- Do not look at the screen or through the viewfinder for prolonged periods of time. This may induce symptoms similar to motion sickness. In such a case, stop using the product immediately and rest for a while before resuming use.

Camcorder

Be sure to observe the following precautions to ensure maximum performance.

- **Save your recordings periodically.** Make sure to transfer your recordings to a computer (📖 100) and save them on a regular basis. This will protect your important recordings in case of damage and create more free space on the SD card. Canon shall not be liable for any data loss.
- Do not use or store the camcorder in dusty or sandy places. The camcorder is not waterproof – avoid also water, mud or salt. If any of the above should get into the camcorder it may damage the camcorder and/or the lens.
- Do not use the camcorder near strong electromagnetic fields such as near powerful magnets and motors, MRI machines or high-voltage power lines. Using the camcorder in such places may cause anomalies in the video, or audio or video noise to appear.
- Do not point the lens or viewfinder at strong light sources. Do not leave the camcorder pointed at a bright subject. Take special care when the camcorder is mounted on a tripod or the camcorder is being carried as the lens or viewfinder might be pointed toward such strong light sources. When the camcorder is not in use, make sure the lens barrier is closed.
- Do not carry the camcorder by the LCD panel. Be careful when closing the LCD panel. When using a wrist strap, do not allow the camcorder to swing and hit an object.
- **Handle the touch screen with care.** Do not apply excessive force and do not use ballpoint pens or other hard-tipped tools to operate the touch screen. This may damage the touch screen's surface.
- Do not attach protective film on the touch screen. The camcorder features a capacitive touch screen so you may not be able to correctly operate the touch screen with an additional protective layer.
- When mounting the camcorder on a tripod, make sure that the tripod's fastening screw is shorter than 6.5 mm (0.26 in.). Using other tripods may damage the camcorder.

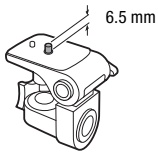

- **When recording clips, try to get a calm, stable picture.** Excessive camcorder movement while shooting and extensive use of fast zooms and panning can result in jittery scenes. In extreme cases, the playback of such scenes may result in visually induced motion sickness. If you experience such a reaction, stop the playback immediately and take a rest break as necessary.

Long-term storage

If you do not intend to use the camcorder for a long time, store it in a place free of dust, in low humidity, and at temperatures not higher than 30 °C (86 °F).

Battery Pack

DANGER!

Treat the battery pack with care.

- Keep it away from fire (or it might explode).
- Do not expose the battery pack to temperature higher than 60 °C (140 °F). Do not leave it near a heater or inside a car in hot weather.
- Do not try to disassemble or modify it.
- Do not drop it or subject it to shocks.
- Do not get it wet.
- Dirty terminals may cause a poor contact between the battery pack and the camcorder. Wipe the terminals with a soft cloth.

Long-term storage

- Store battery packs in a dry place at temperatures no higher than 30 °C (86 °F).
- To extend the battery life of the battery pack, discharge it completely before storing it.
- Charge and discharge all your battery packs fully at least once a year.

Remaining battery time

When you are using a battery pack that is compatible with Intelligent System, if the remaining battery time displayed is not correct, charge the battery pack fully. Still, the correct time may not be displayed after a large number of repeated uses, if a fully charged battery pack is left unused, or if a battery pack is used for long periods of time in high temperatures. Use the time shown on the screen as an approximation.

Regarding the use of non-Canon battery packs

- For your safety, battery packs that are not genuine Canon battery packs will not be charged even if you attach them to this camcorder or to the optional CG-800 Battery Charger.
- We recommend using genuine Canon battery packs bearing the Intelligent System mark. Intelligent Li-ion Battery
- If you attach to the camcorder battery packs that are not genuine Canon battery packs, will appear and the remaining battery time will not be displayed.

SD Card

- We recommend backing up the recordings on the SD card onto your computer. Data may be corrupted or lost due to card defects or exposure to static electricity. Canon shall not be liable for lost or corrupted data.
- Do not touch or expose the terminals to dust or dirt.
- Do not use SD cards in places subject to strong magnetic fields.
- Do not leave SD cards in places subject to high humidity and high temperature.
- Do not disassemble, bend, drop, or subject SD cards to shocks and do not expose them to water.
- Check the direction before inserting the SD card. Forcing an SD card into a slot if it is not correctly oriented may damage the card or the camcorder.
- Do not attach any labels or stickers on the SD card.

Built-in Rechargeable Lithium Battery

The camcorder has a built-in rechargeable lithium battery to keep the date/time and other settings. The built-in lithium battery is recharged while you use the camcorder; however, it will discharge completely if you do not use the camcorder for about 3 months.

To recharge the built-in lithium battery: Connect the compact power adapter to the camcorder and leave it connected for 24 hours with the camcorder off.

Disposal

When you delete clips or initialize an SD card, only the file allocation table is altered and stored data is not physically erased. When you dispose of an SD card or give either to another person, initialize it first (📖 32). Fill it up with unimportant recordings, and then initialize it again. This makes recovering the original recordings very difficult.

Maintenance/Others

Cleaning

Camcorder Body

- Use a soft, dry cloth to clean the camcorder body. Never use chemically treated cloths or volatile solvents such as paint thinner.

Lens, Viewfinder and Instant AF Sensor

- If the lens surface or Instant AF sensor is dirty, autofocus may not work properly.
- Remove any dust or dirt particles using a non-aerosol type blower.
- Use a clean, soft lens-cleaning cloth to gently wipe the lens or viewfinder. Never use tissue paper.

LCD Touch Screen

- Clean the LCD touch screen using a clean, soft lens-cleaning cloth.
- Condensation may form on the surface of the screen when the temperature changes suddenly. Wipe it with a soft dry cloth.

Condensation

Moving the camcorder rapidly between hot and cold temperatures may cause condensation (water droplets) to form on its internal surfaces. Stop using the camcorder if condensation is detected. Continued use may damage the camcorder.

Condensation may form in the following cases:

- When the camcorder is moved quickly from cold to warm places
- When the camcorder is left in a humid room
- When a cold room is heated rapidly

To avoid condensation

- Do not expose the camcorder to sudden or extreme changes in temperature.
- Remove the SD cards and battery pack. Then, place the camcorder in an airtight plastic bag and let it adjust gradually to temperature changes before removing it from the bag.

When condensation is detected

The precise time required for water droplets to evaporate will vary depending on the location and weather conditions. As a general rule, wait for 2 hours before resuming use of the camcorder.

Viewing the Certification Logo

You can open the **MENU** ➤ [System Setup] ➤ [Certification Information] screen to view some certification information for this camcorder.

Using the Camcorder Abroad

Power Sources

You can use the compact power adapter to operate the camcorder and to charge battery packs in any country with power supply between 100 and 240 V AC, 50/60 Hz. Consult a Canon Service Center for information on plug adapters for overseas use.

Optional Accessories (Availability differs from area to area)

The following optional accessories are compatible with this camcorder. Select accessories are described in more detail in the following pages.

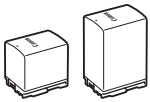

BP-820, BP-828
Battery Pack

CG-800
Battery Charger

CA-570 Compact
Power Adapter

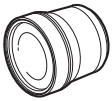

TL-H58
Tele-converter

WA-H58 Wide
Attachment

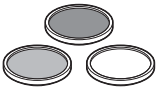

Protect Filter 58 mm,
ND4L Filter 58 mm,
ND8L Filter 58 mm

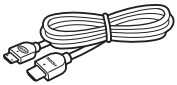

HTC-100 High Speed
HDMI Cable

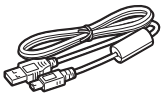

IFC-400PCU
USB Cable

RC-V100
Remote Controller

GP-E2
GPS Receiver

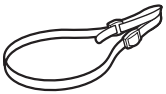

SS-600/SS-650
Shoulder Strap

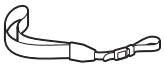

WS-20
Wrist Strap

SC-2000
Soft Carrying Case

Call or visit your local retailer/dealer for genuine Canon video accessories. You can also obtain genuine accessories for your Canon camcorder by calling: 1-800-828-4040, Canon U.S.A. Information Center.

Use of genuine Canon accessories is recommended.
This product is designed to achieve excellent performance when used with genuine Canon accessories. Canon shall not be liable for any damage to this product and/or accidents such as fire, etc., caused by the malfunction of non-genuine Canon accessories (e.g., a leakage and/or explosion of a battery pack). Please note that this warranty does not apply to repairs arising out of the malfunction of non-genuine Canon accessories, although you may request such repairs on a chargeable basis.

Battery Packs

When you need extra battery packs, select one of the following models: BP-820 or BP-828.

When you use battery packs bearing the Intelligent System mark, the camcorder will communicate with the battery and display the remaining usage time (accurate to 1 minute). You can only use and charge these battery packs with camcorders and chargers compatible with Intelligent System.

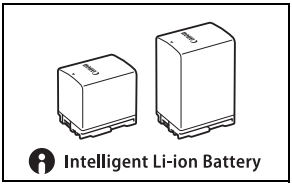

CG-800 Battery Charger

Use the battery charger to charge the battery packs. It plugs directly into a power outlet without a cable.

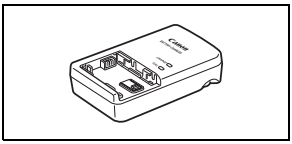

TL-H58 Tele-converter

This tele-converter lens increases the focal length of the camcorder lens by a factor of 1.5.

- The tele-converter cannot be used together with the supplied lens hood with lens barrier.
- The minimum focusing distance at full telephoto with the tele-converter is 1.3 m (4.3 ft.).

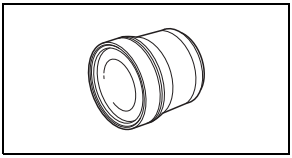

WA-H58 Wide Attachment

This wide attachment lens decreases the focal length by a factor of 0.75, giving you a wide perspective for indoor shots or panoramic views.

- The wide attachment cannot be used together with the supplied lens hood with lens barrier.

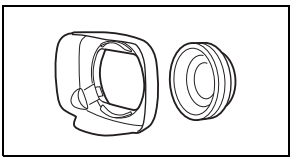

Protect Filter 58 mm, ND4L Filter 58 mm, ND8L Filter 58 mm

Neutral density and MC protector filters help you to control difficult lighting conditions.

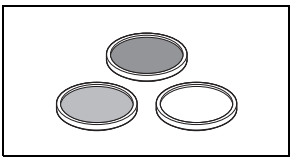

SC-2000 Soft Carrying Case

A handy camcorder bag with padded compartments and plenty of space for accessories.

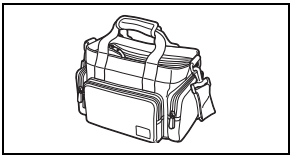

This mark identifies genuine Canon video accessories. When you use Canon video equipment, we recommend Canon-brand accessories or products bearing the same mark.

Specifications

XA45 / XA40

♦ — Values given are approximate figures.

System

- Recording System
  Clips: MP4 Video: MPEG-4 AVC/H.264
  Audio: MPEG-2 LPCM (4ch), MPEG-2 AAC-LC (2ch)
  Video configuration (resolution, bit rate, frame rate)
  3840x2160: 150 Mbps (29.97P, 23.98P)
  1920x1080: 35 Mbps, 17 Mbps (59.94P, 29.97P, 23.98P)
  1280x720: 8 Mbps (59.94P)
  Color sampling: YCbCr 4:2:0, 8 bit
  Photos: DCF (Design rule for Camera File system), compatible with Exif[1] Ver. 2.3
  Image type: JPEG
  [1] This camcorder supports Exif 2.3 (also called "Exif Print"). Exif Print is a standard for enhancing the communication between camcorders and printers. By connecting to an Exif Print-compliant printer, the camcorder's image data at the time of shooting is used and optimized, yielding extremely high quality prints.
- Recording Media (not included)
  SD, SDHC (SD High Capacity) or SDXC (SD eXtended Capacity) card (2 slots)
- Image Sensor
  1/2.3-inch CMOS, 21,140,000 pixels♦
  Effective pixels: 8,290,000 pixels♦
- LCD Touch Screen: 3.0 in., wide, TFT color, 460,000 dots♦, 100% coverage, capacitive touch screen operation
- Viewfinder: 0.24 in., wide, color, equivalent to 1,560,000 dots♦, 100% coverage
- Microphone: Stereo electret condenser microphone, attenuator (20 dB)
- Lens
  f=3.67-73.4 mm, F/1.8-2.8, 20x optical zoom, 8-bladed circular aperture
  When the resolution is 3840x2160 (35 mm equivalent):
  30.6 – 612 mm♦ (when Dynamic IS is activated)
  29.3 – 601 mm♦ (for other image stabilization settings)
  For other resolutions (35 mm equivalent):
  32.0 – 640 mm♦ (when Dynamic IS is activated)
  30.5 – 627 mm♦ (for other image stabilization settings)
- Lens Configuration: 12 elements in 10 groups (two aspheric elements)
- AF System
  Autofocus (TTL + external distance sensor when set to [Instant AF] or [Medium AF]) or Manual focus
- Filter Diameter: 58 mm
- Minimum Focusing Distance
  60 cm (2 ft.); 1 cm (0.39 in.) at full wide angle

- White Balance
  Auto white balance, Custom white balance (2 settings), User-defined color temperature or Preset white balance settings: Daylight, Tungsten
- Minimum Illumination
  0.3 lx♦ ([Low Light] shooting mode, 1/2 shutter speed)
  5.0 lx♦ ([Programmed AE] shooting mode, 59.94P frame rate, 1/30 shutter speed, auto slow shutter on)
- Recommended Illumination: More than 100 lx
- Image Stabilization: Optical-shift image stabilizer + digital compensation
- Size of Photos: 3840x2160 (3,080 KB), 1920x1080 (880 KB), 1280x720 (420 KB)
  The number in parentheses indicates the file size.

Terminals

- HDMI OUT Terminal: HDMI mini connector; output only
- USB Terminal: mini-B receptacle, Hi-Speed USB; output only
- MIC Terminal
  ∅ 3.5 mm stereo minijack (unbalanced); power can be supplied to a plug-in power microphone
  Sensitivity:
  –65 dBV (auto volume, full scale –12 dB) / 1.5 kΩ or more
  Microphone attenuator: 20 dB
  Supplied power: 2.4 V (bias resistance 2.2 kΩ)
- INPUT Terminals
  INPUT jack (pin1: shield, pin2: hot, pin3: cold), 2 sets (balanced)
  Sensitivity:
  For microphone input: –60 dBu (manual volume center, full scale –18 dB) / 600 Ω
  For line input: 4 dBu (manual volume center, full scale –18 dB) / 10 kΩ
  Microphone attenuator: 20 dB
- ∩ (headphone) Terminal
  ∅ 3.5 mm stereo minijack (unbalanced)
  –24 dBV (32 Ω load, max volume) / 100 Ω
- REMOTE Terminal: ∅ 2.5 mm stereo sub-mini jack; input only

Power/Others

- Power supply (rated)
  7.4 V DC (battery pack), 8.4 V DC (compact power adapter)
- Power consumption♦:
  XA45 4.4 W **XA40** 4.2 W (150 Mbps, AF on, LCD normal brightness)
- Operating temperature♦: 0 – 40 °C (32 – 104 °F)
- Dimensions♦ [W x H x D] (excluding the grip belt)
  Camcorder only: 109 x 84 x 182 mm (4.3 x 3.3 x 7.2 in.)
  Camcorder with the lens hood attached: 115 x 84 x 231 mm (4.5 x 3.3 x 9.1 in.)
  Camcorder with the lens hood and handle unit attached: 131 x 180 x 231 mm (5.2 x 7.1 x 9.1 in.)

- Weight♦
  XA45
  Camcorder only: 740 g (1.6 lb.)
  Camcorder with lens hood, BP-820 Battery Pack, one SD card, handle unit: 1,130 g (2.5 lb.)
  XA40
  Camcorder only: 730 g (1.6 lb.)
  Camcorder with lens hood, BP-820 Battery Pack, one SD card, handle unit: 1,120 g (2.5 lb.)

CA-570 Compact Power Adapter

- Power supply: 100 – 240 V AC, 50/60 Hz
- Rated output / consumption: 8.4 V DC, 1.5 A / 29 VA (100 V) – 39 VA (240 V)
- Operating temperature♦: 0 – 40 °C (32 – 104 °F)
- Dimensions♦: 52 x 29 x 90 mm (2.1 x 1.1 x 3.5 in.)
- Weight♦: 135 g (4.8 oz.)

BP-820 Battery Pack

- Battery type
  Rechargeable lithium ion battery, compatible with Intelligent System
- Rated voltage: 7.4 V DC
- Operating temperature♦: 0 – 40 °C (32 – 104 °F)
- Battery capacity: 1780 mAh (typical); 13 Wh / 1700 mAh (minimum)
- Dimensions♦: 30.7 x 39.4 x 40.2 mm (1.2 x 1.6 x 1.6 in.)
- Weight♦: 85 g (3.0 oz.)

Weight and dimensions are approximate. Errors and omissions excepted.

Reference Tables

Approximate recording times

The camcorder uses a variable bit rate (VBR) to encode video so the actual recording times will vary depending on the subject. The following table shows the approximate recording times for a single recording operation until the indicated SD card becomes full.

MP4 audio format	Bit rate	SD card				
		8 GB	16 GB	32 GB	64 GB	128 GB
[4CH LPCM 16bit 4CH]	150 Mbps	5 min.	10 min.	25 min.	55 min.	110 min.
	35 Mbps	25 min.	50 min.	110 min.	220 min.	445 min.
	17 Mbps	45 min.	100 min.	205 min.	420 min.	845 min.
[2CH AAC 16bit 2CH]	150 Mbps	5 min.	10 min.	25 min.	55 min.	110 min.
	35 Mbps	25 min.	55 min.	115 min.	240 min.	485 min.
	17 Mbps	55 min.	120 min.	245 min.	495 min.	995 min.
	8 Mbps	120 min.	255 min.	520 min.	1,055 min.	2,120 min.

Charging, Recording and Playback Times

The charging times given in the following table are approximate and vary according to charging conditions and initial charge of the battery pack.

Battery pack→ Charging conditions↓	BP-820	BP-828
Using the camcorder	210 min.	300 min.
Using the CG-800 Battery Charger	190 min.	260 min.

Recording and playback times given in the following tables are approximate and vary according to video configuration and charging, recording or playback conditions. The times are based on using the LCD screen. The effective usage time of the battery pack may decrease when recording in cold surroundings, when using the brighter screen settings, etc.

XA45

Battery pack	Resolution/Bit rate	Recording (maximum)	Recording (typical)*	Playback
BP-820	3840x2160 (150 Mbps)	165 min.	90 min.	260 min.
	1920x1080 (35 Mbps)	190 min.	105 min.	270 min.
	1280x720 (8 Mbps)	165 min.	95 min.	280 min.
BP-828	3840x2160 (150 Mbps)	250 min.	140 min.	385 min.
	1920x1080 (35 Mbps)	290 min.	160 min.	400 min.
	1280x720 (8 Mbps)	260 min.	140 min.	415 min.

* Approximate times for recording with repeated operations such as start/stop, zooming, and power on/off.

XA40

Battery pack	Resolution/Bit rate	Recording (maximum)	Recording (typical)*	Playback
BP-820	3840x2160 (150 Mbps)	170 min.	95 min.	280 min.
	1920x1080 (35 Mbps)	200 min.	110 min.	290 min.
	1280x720 (8 Mbps)	175 min.	100 min.	300 min.
BP-828	3840x2160 (150 Mbps)	265 min.	145 min.	415 min.
	1920x1080 (35 Mbps)	305 min.	165 min.	435 min.
	1280x720 (8 Mbps)	270 min.	150 min.	460 min.

* Approximate times for recording with repeated operations such as start/stop, zooming, and power on/off.

Index

4-channel audio recording 68

A

Abroad, using the camcorder 127
Accessories 128
AGC (automatic gain control) limit 48
Aperture (f number) 42
Assignable buttons 85
Audio format 68
Audio output 99
Audio recording level 74
Audio reference signal 77
AUTO mode 34
Auto slow shutter 104
Av (shooting mode) 43

B

Backlight correction 47
Battery pack
- Battery information 111
- Charging 15
- Remaining battery charge 17

Beach (Special Scene mode) 40
Bit rate 37
Built-in backup battery 125
Built-in microphone 68

C

Camera mode switch 24
Charging time 134
Clips
- Clip information 91
- Deleting 92
- Playback 88
- Recording 34
- Recovering 33

Color bars 77
Compact power adapter 15
Condensation 126
Connection to an external monitor 96
Copying recordings to an SD card 101
CUSTOM button 84
CUSTOM dial 84

D

Data code 79, 105
Date and time 25
DC IN terminal 15
Deleting recordings 92
Digital tele-converter 56
Dioptric adjustment 20
Dual recording 32

E

Error messages 120
Exposure
- Exposure compensation 45
- Exposure lock 45
- Highlight AE 44
- Manual exposure 42
- Touch AE 44

External microphone 70

F

Face detection & tracking 61
Ferrite core, attaching 15
File number 107
Fireworks (Special Scene mode) 41
Flicker reduction 104
Focus 57
- Autofocus 60
- Focus assistance functions 58
- Focus preset 58

Focus/zoom ring 52, 57
Frame rate 37
FUNC menu 28, 102

G

Gain 42

H

Handle unit 18
HDMI OUT terminal 96, 97
Headphones 76
(headphones) terminal 76

I

Image stabilizer 63
Infrared light 80
Infrared recording 80
Initializing an SD card 32
INPUT terminals 68

J

Joystick 24

L

Language 26
Lens hood 19
Look 51
Low cut filter 75
Low light (Special Scene mode) 40

M

M (shooting mode) 42
Magnification 59
Maintenance 126
Menu settings, saving and loading 87
MIC terminal 70
Microphone attenuator 73, 75
Microphone sensitivity 74
MP4 Join Tool 100

N

ND Filter 46
Night scene (Special Scene mode) 40
Notification sounds 108

O

Onscreen displays 79, 112
Onscreen icons 112
Onscreen markers 109

P

P (shooting mode) 43
Peaking 59
Photos
- Deleting 92
- Recording 34
- Viewing 88

Playback 88
Plug-in power (microphone) 73
Portrait (Special Scene mode) 40
Powered IS 63
Pre-recording 78

R

Recording 34
Recording audio 68
Relay recording 32
Remote controller 81
Resetting all camcorder settings 111
Resolution (frame size) 37
Reviewing recordings 36

S

Saving clips to a computer 100
SD card 124
- Compatible SD cards 30
- Initializing 32
- Inserting/Removing 31
- Selecting the SD card for recording 32

SDI OUT terminal* 97
Serial number 12
Setup menus 27, 103
Shooting mode 39
Shutter speed 42
Slow & fast motion recording 38
Snow (Special Scene mode) 40
Speaker 91
Sports (Special Scene mode) 40
Spotlight (Special Scene mode) 40
Sunset (Special Scene mode) 40

T

Tally lamp 110
Time code 64
Time zone/DST 26
Trimming clips 93
Tripod 123
Troubleshooting 116
Turning off notification sounds 108
Turning the camcorder on/off 23
Tv (shooting mode) 43

U

USB terminal 82
User bit 67

V

Video configuration 37
Video output configuration 94
Viewfinder 20
Volume 76, 91

W

White balance 49

* XA45 only.

Z

Zebra pattern 46
Zoom 52
Digital zoom 104
High-speed zoom 54
Soft zoom control 55
Zoom speed 53, 55

USA

CANON PROFESSIONAL DIGITAL VIDEO EQUIPMENT LIMITED WARRANTY FOR PRODUCTS PURCHASED IN THE UNITED STATES

The limited warranty set forth below is given by Canon U.S.A., Inc. ('Canon USA') with respect to Canon Professional Digital Video Equipment (the 'Equipment') packaged with this limited warranty and purchased in the United States. This limited warranty is only effective upon presentation of your Bill of Sale or other proof of purchase. The Equipment is warranted to the original end-user purchaser, when delivered in new condition in its original container, under normal use against defective materials or workmanship as follows:
Parts: Defective parts will be exchanged for new parts or comparable rebuilt parts for a period of ONE YEAR from the date of original purchase.
Labor: For a period of ONE YEAR from the date of original purchase, labor will be provided free of charge by Canon USA's factory service centers or designated service facilities located in the United States.
When returning Equipment under this warranty, you must pre-pay the shipping charges, and you must enclose a copy of the Bill of Sale or other proof of purchase with a complete explanation of the problem. During the ONE-YEAR warranty period, repairs will be made and the Equipment will be return-shipped to you free of charge. For repairs after the warranty period is over, you will be given an estimate of the cost of repair and an opportunity to approve or disapprove of the repair expense before it is incurred. If you approve, repairs will be made and the Equipment will be returned to you at your risk and expense. If you disapprove, we will return-ship the Equipment to you at no charge to you to an address within the United States.

This limited warranty only applies if the Equipment is used in conjunction with compatible computer equipment and compatible software, as to which items Canon USA will have no responsibility. Canon USA shall have no responsibility under this limited warranty for use of the Equipment in conjunction with incompatible peripheral equipment and/or incompatible software. Non-Canon brand peripheral equipment and software which may be distributed with, or factory loaded on, the Equipment, are sold 'AS IS' without warranty of any kind by Canon USA, including any implied warranty regarding merchantability or fitness for a particular purpose. The sole warranty with respect to such non-Canon brand items is given by the manufacturer or producer thereof. If the Equipment contains a hard disk drive, Canon USA recommends that data stored on that drive be duplicated or backed up to prevent its loss in the event of failure or other malfunction of such drive.

In order to obtain warranty service, please contact the authorized Canon retail dealer from whom you purchased the Equipment or contact the CANON INFORMATION CENTER AT **855-CINE-EOS** (855-246-3367) or on the Internet at **pro.usa.canon.com/support**. You will be directed to the nearest service facility for your Equipment.

This Limited Warranty covers all defects encountered in normal use of the Equipment and does not apply in the following cases:

A. Loss or damage to the Equipment due to abuse, mishandling, accident, improper maintenance, use of non-Canon accessories or failure to follow operating, maintenance or environmental instructions prescribed in Canon USA's user's manual;
B. If the Equipment is defective as a result of leaking batteries, sand, dirt or water damage;
C. If defects or damages are caused by the use of parts or supplies (other than those sold by Canon USA) that cause damage to the Equipment or that cause abnormally frequent service calls or service problems;
D. If defects or damages are caused by service other than Canon USA's factory service centers or authorized service facilities;
E. Any internal modification to product hardware or firmware;
F. Any applicable fee for Maintenance of the Equipment;
G. If the Equipment has had its serial number or dating altered or removed.

This Limited Warranty does not apply to Equipment purchased outside the United States. This Limited Warranty does not apply to accessories or consumables for the Equipment, which are sold "AS IS", without warranty of any kind by Canon USA. Please retain this warranty card and your Bill of Sale as a permanent record of your purchase. This card ensures that you are contacted promptly should there be a safety inspection, modification or product recall under applicable laws or regulations.

NO IMPLIED WARRANTY, INCLUDING MERCHANTABILITY AND FITNESS FOR A PARTICULAR PURPOSE APPLIES TO THIS EQUIPMENT AFTER THE APPLICABLE PERIOD OF EXPRESS WARRANTY OR GUARANTY (EXCEPT AS MENTIONED ABOVE) GIVEN BY ANY PERSON, FIRM OR CORPORATION WITH RESPECT TO THIS EQUIPMENT SHALL BIND THE UNDERSIGNED (SOME STATES DO NOT ALLOW LIMITATIONS ON HOW LONG AN IMPLIED WARRANTY LASTS, SO THE ABOVE LIMITATION OR EXCLUSION MAY NOT APPLY TO YOU). CANON USA SHALL NOT BE LIABLE FOR LOSS OF REVENUES OR PROFITS, EXPENSE FOR SUBSTITUTE EQUIPMENT OR SERVICE, STORAGE CHARGES, LOSS OR CORRUPTION OF DATA, INCLUDING WITHOUT LIMITATION, LOSS OR CORRUPTION OF DATA STORED ON THE EQUIPMENT'S HARD DRIVE, OR ANY OTHER SPECIAL, INCIDENTAL OR CONSEQUENTIAL DAMAGES CAUSED BY THE USE, MISUSE OR INABILITY TO USE THE EQUIPMENT, REGARDLESS OF THE LEGAL THEORY ON WHICH THE CLAIM IS BASED, AND EVEN IF CANON USA HAS BEEN ADVISED OF THE POSSIBILITY OF SUCH DAMAGES. NOR SHALL RECOVERY OF ANY KIND AGAINST CANON USA BE GREATER THAN THE PURCHASE PRICE OF THE EQUIPMENT SOLD BY CANON USA AND CAUSING THE ALLEGED DAMAGE. WITHOUT LIMITING THE FOREGOING, YOU ASSUME ALL RISK AND LIABILITY FOR LOSS, DAMAGE OR INJURY TO YOU AND YOUR PROPERTY AND TO OTHERS AND THEIR PROPERTY ARISING OUT OF USE, MISUSE OR INABILITY TO USE THE EQUIPMENT NOT CAUSED DIRECTLY BY THE NEGLIGENCE OF CANON USA (SOME STATES DO NOT ALLOW THE EXCLUSION OR LIMITATION OF INCIDENTAL OR CONSEQUENTIAL DAMAGES, SO THE ABOVE LIMITATION MAY NOT APPLY TO YOU).THIS WARRANTY SHALL NOT EXTEND TO ANYONE OTHER THAN THE ORIGINAL PURCHASER OF THIS EQUIPMENT OR THE PERSON FOR WHOM IT WAS PURCHASED AS A GIFT.

This warranty gives you specific legal rights, and you may also have other rights which vary from state to state.

CANON U.S.A., INC.

CANADA

CANON PROFESSIONAL DIGITAL VIDEO EQUIPMENT LIMITED WARRANTY FOR PRODUCTS PURCHASED IN CANADA

The limited warranty set forth below is given by Canon Canada Inc. ('Canon Canada') with respect to Canon Professional Digital Video Equipment (the 'Equipment') packaged with this limited warranty and purchased in Canada. This limited warranty is only effective upon presentation of your Bill of Sale or other proof of purchase. The Equipment is warranted to the original end-user purchaser, when delivered in new condition in its original container, under normal use against defective materials or workmanship as follows:
Parts: Defective parts will be exchanged for new parts or comparable rebuilt parts for a period of ONE YEAR from the date of original purchase.
Labor: For a period of ONE YEAR from the date of original purchase, labor will be provided free of charge by Canon Canada's factory service center or designated service facilities located in Canada.
When returning Equipment under this warranty, you must pre-pay the shipping charges, and you must enclose a copy of the Bill of Sale or other proof of purchase with a complete explanation of the problem. During the ONE-YEAR warranty period, repairs will be made and the Equipment will be return-shipped to you free of charge. For repairs after the warranty period is over, you will be given an estimate of the cost of repair and an opportunity to approve or disapprove of the repair expense before it is incurred. If you approve, repairs will be made and the Equipment will be returned to you at your risk and expense. If you disapprove, we will return-ship the Equipment to you at no charge to you to an address within Canada.

This limited warranty only applies if the Equipment is used in conjunction with compatible computer equipment and compatible software, as to which items Canon Canada will have no responsibility. Canon Canada shall have no responsibility under this limited warranty for use of the Equipment in conjunction with incompatible peripheral equipment and/or incompatible software. Non-Canon brand peripheral equipment and software which may be distributed with, or factory loaded on, the Equipment, are sold 'AS IS' without warranty of any kind by Canon Canada, including any implied warranty or condition regarding merchantability or fitness for a particular purpose. The sole warranty with respect to such non-Canon brand items is given by the manufacturer or producer thereof. If the Equipment contains a hard disk drive, Canon Canada recommends that data stored on that drive be duplicated or backed up to prevent its loss in the event of failure or other malfunction of such drive.

In order to obtain warranty service, please contact the authorized Canon retail dealer from whom you purchased the Equipment or contact the CANON PROFESSIONAL SERVICE CENTRE 1-800-667-2666 or on the Internet at **www.canon.ca/pro**. You will be directed to the nearest service facility for your Equipment.

This Limited Warranty covers all defects encountered in normal use of the Equipment and does not apply in the following cases:

A. Loss or damage to the Equipment due to abuse, mishandling, accident, improper maintenance, use of non-Canon accessories or failure to follow operating, maintenance or environmental instructions prescribed in Canon Canada's user's manual;
B. If the Equipment is defective as a result of leaking batteries, sand, dirt or water damage;
C. If defects or damages are caused by the use of parts or supplies (other than those sold by Canon Canada) that cause damage to the Equipment or that cause abnormally frequent service calls or service problems;
D. If defects or damages are caused by service other than Canon Canada's factory service centers or authorized service facilities;
E. Any internal modification to product hardware or firmware;
F. Any applicable fee for Maintenance of the Equipment;
G. If the Equipment has had its serial number or dating altered or removed.

This Limited Warranty does not apply to Equipment purchased outside Canada. This Limited Warranty does not apply to accessories or consumables for the Equipment, which are sold "AS IS", without warranty of any kind by Canon Canada. Please retain this warranty card and your Bill of Sale as a permanent record of your purchase. This card ensures that you are contacted promptly should there be a safety inspection, modification or product recall under applicable laws or regulations.

NO IMPLIED WARRANTY OR CONDITION, INCLUDING MERCHANTABILITY AND FITNESS FOR A PARTICULAR PURPOSE APPLIES TO THIS EQUIPMENT AFTER THE APPLICABLE PERIOD OF EXPRESS WARRANTY OR GUARANTY (EXCEPT AS MENTIONED ABOVE) GIVEN BY ANY PERSON, FIRM OR CORPORATION WITH RESPECT TO THIS EQUIPMENT SHALL BIND THE UNDERSIGNED (SOME PROVINCES DO NOT ALLOW LIMITATIONS ON HOW LONG AN IMPLIED WARRANTY OR CONDITION LASTS, SO THE ABOVE LIMITATION OR EXCLUSION MAY NOT APPLY TO YOU). CANON CANADA SHALL NOT BE LIABLE FOR LOSS OF REVENUES OR PROFITS, EXPENSE FOR SUBSTITUTE EQUIPMENT OR SERVICE, STORAGE CHARGES, LOSS OR CORRUPTION OF DATA, INCLUDING WITHOUT LIMITATION, LOSS OR CORRUPTION OF DATA STORED ON THE EQUIPMENT'S HARD DRIVE, OR ANY OTHER SPECIAL, INCIDENTAL OR CONSEQUENTIAL DAMAGES CAUSED BY THE USE, MISUSE OR INABILITY TO USE THE EQUIPMENT, REGARDLESS OF THE LEGAL THEORY ON WHICH THE CLAIM IS BASED, AND EVEN IF CANON CANADA HAS BEEN ADVISED OF THE POSSIBILITY OF SUCH DAMAGES. NOR SHALL RECOVERY OF ANY KIND AGAINST CANON CANADA BE GREATER THAN THE PURCHASE PRICE OF THE EQUIPMENT SOLD BY CANON CANADA AND CAUSING THE ALLEGED DAMAGE. WITHOUT LIMITING THE FOREGOING, YOU ASSUME ALL RISK AND LIABILITY FOR LOSS, DAMAGE OR INJURY TO YOU AND YOUR PROPERTY AND TO OTHERS AND THEIR PROPERTY ARISING OUT OF USE, MISUSE OR INABILITY TO USE THE EQUIPMENT NOT CAUSED DIRECTLY BY THE NEGLIGENCE OF CANON CANADA (SOME PROVINCES DO NOT ALLOW THE EXCLUSION OR LIMITATION OF INCIDENTAL OR CONSEQUENTIAL DAMAGES, SO THE ABOVE LIMITATION MAY NOT APPLY TO YOU). THIS WARRANTY SHALL NOT EXTEND TO ANYONE OTHER THAN THE ORIGINAL PURCHASER OF THIS EQUIPMENT OR THE PERSON FOR WHOM IT WAS PURCHASED AS A GIFT.

This warranty gives you specific legal rights, and you may also have other rights which vary from province to province.

CANON CANADA INC.

Canon Inc. 30-2, Shimomaruko 3-chome, Ohta-ku, Tokyo 146-8501, Japan

The information in this document is verified as of February 2019. Subject to change without notice. Visit your local Canon website to download the latest version.

© CANON INC. 2019

PUB.DIE-0525-000